www.forgetools.net

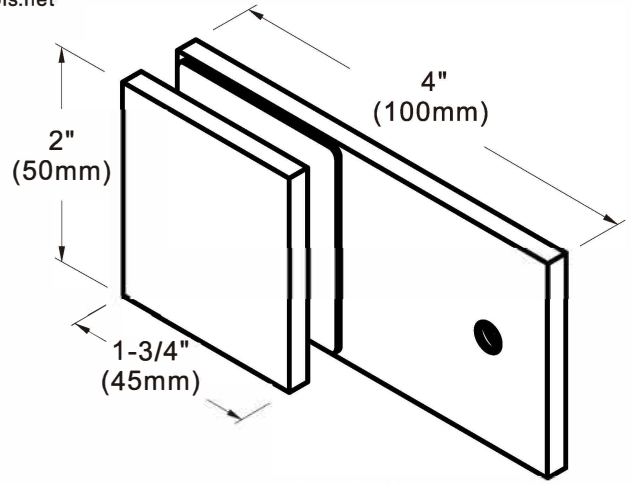

FRONT VIEW

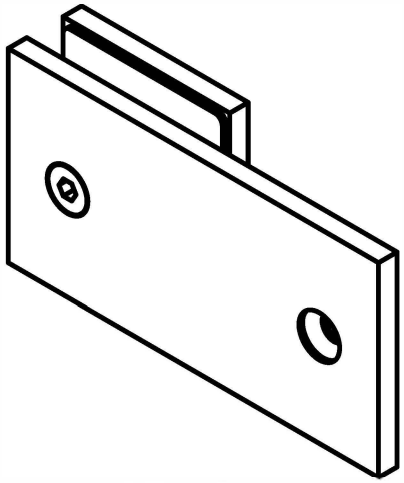

REAR VIEW

Glass Clamps

Code NO. **YGSC180**

Wall-to-Glass Application

SPECIFICATIONS

Material: Solid brass

Glass Thickness Range: 5/16"(8mm) to 1/2"(12mm)

Hole Size Required: 3/4"(19mm)

Includes: Mounting screws and gaskets

www.forgetools.net

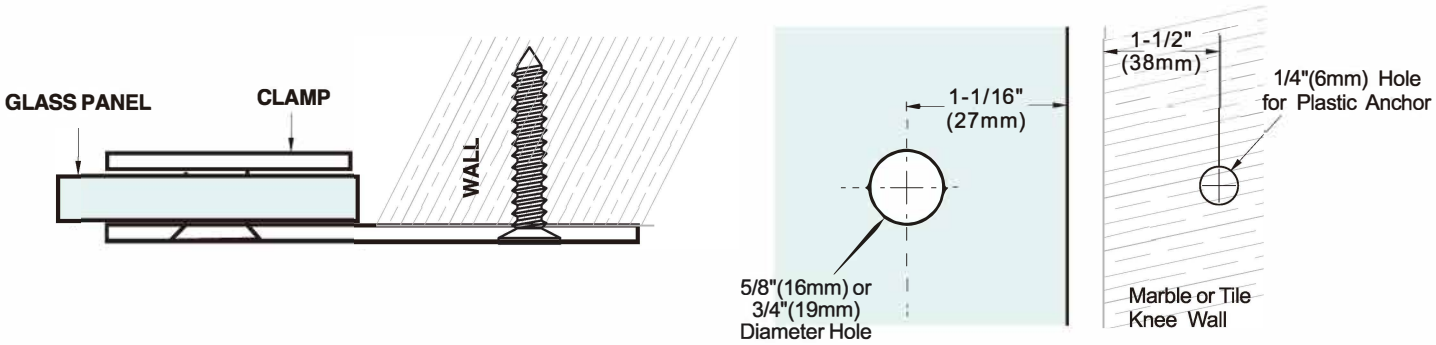

IMPORTANT: Project measurements from the edge of the glass.

Glass Clamps
Code NO. **YGSC180**
Wall-to-Glass Application

Email: info@forgetools.net
www.forgetools.net