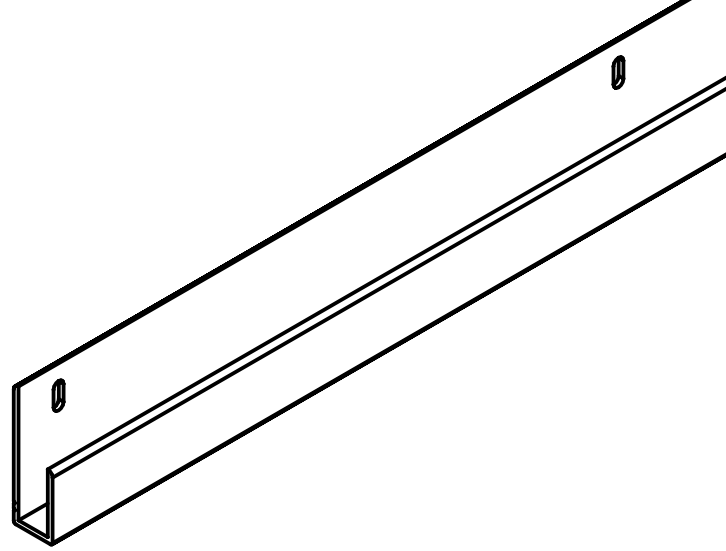

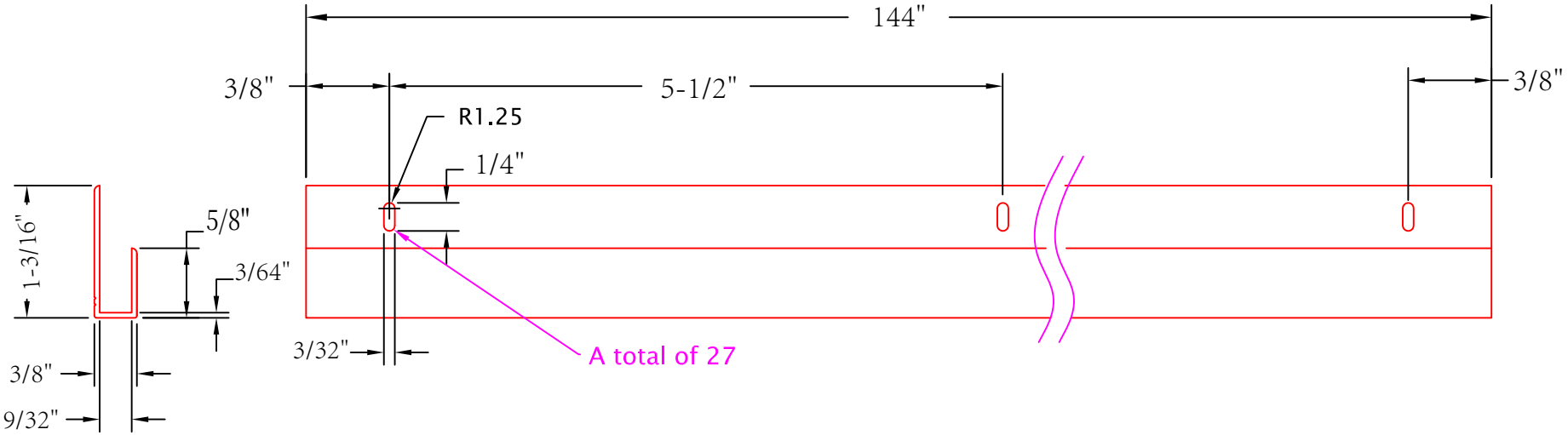
144"
3/8"
5-1/2"
3/8"
R1.25
1/4"
1-3/16"
5/8"
3/64"
3/32"
A total of 27
3/8"
9/32"