FORGE
TOOLS AND HARDWARE
www.forgetools.net

INSTALLATION INSTRUCTIONS

GLIDE SERIES

TUBULAR SINGLE SLIDING DOOR KIT



Email: info@forgetools.net **www.forgetools.net**

PARTS LIST

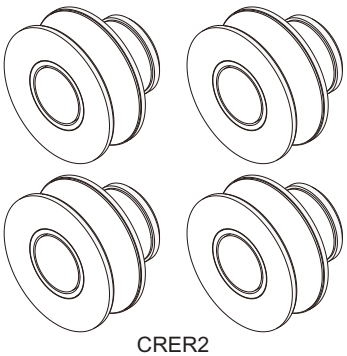

CRER2
Roller
Total Four Included in Kit

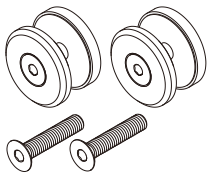

CREF1
Fixed Panel Fitting
Set of Two per Package

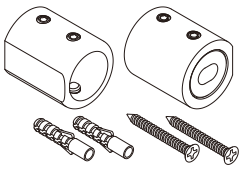

CREW1
Track Holder Fitting
Set of Two per Package

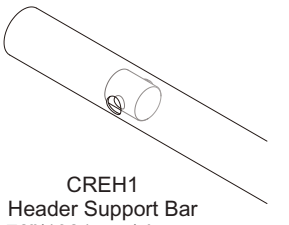

CREH1
Header Support Bar
78"(1981 mm) Long
(Drilled with Grommet inserts at holes.)

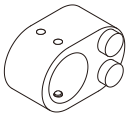

CRES1
Stopper

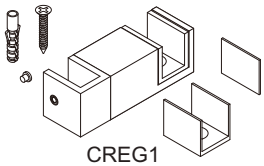

CREG1
Bottom Door Guide

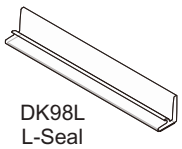

DK98L
L-Seal
80"(2032 mm) Long

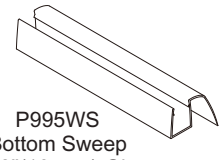

P995WS
Bottom Sweep
for 3/8"(10 mm) Glass

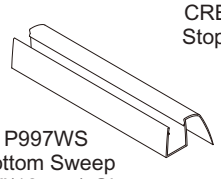

P997WS
Bottom Sweep
for 1/2"(12 mm) Glass

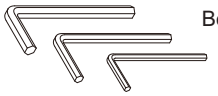

3, 4 and 5 mm
Allen Wrenches

SPECIFICATIONS

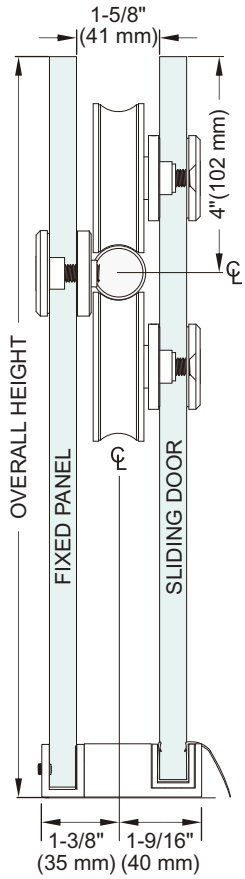

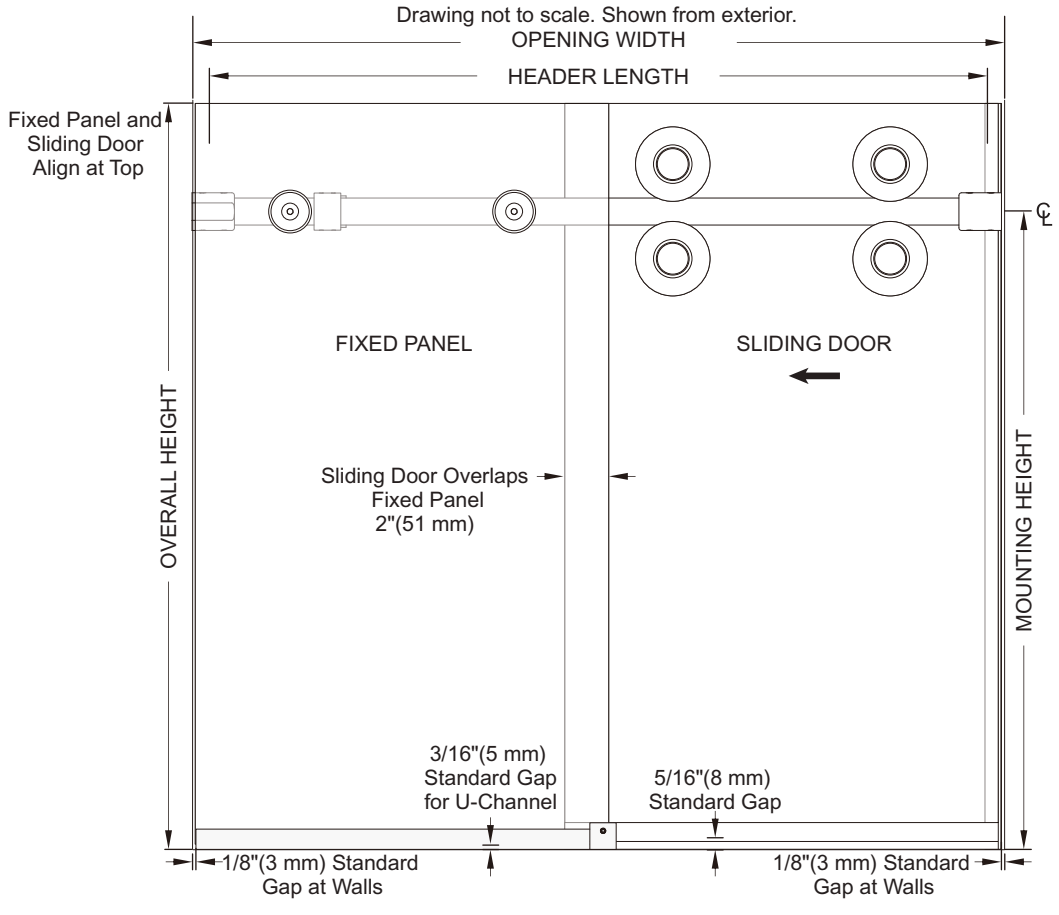

www.forgetools.net

GLASS FABRICATION

Use 3/8” or 1/2” (10 or 12 mm) Tempered Glass only. Do not use Laminated Glass.

Choose a fixed panel set up depending on opening width

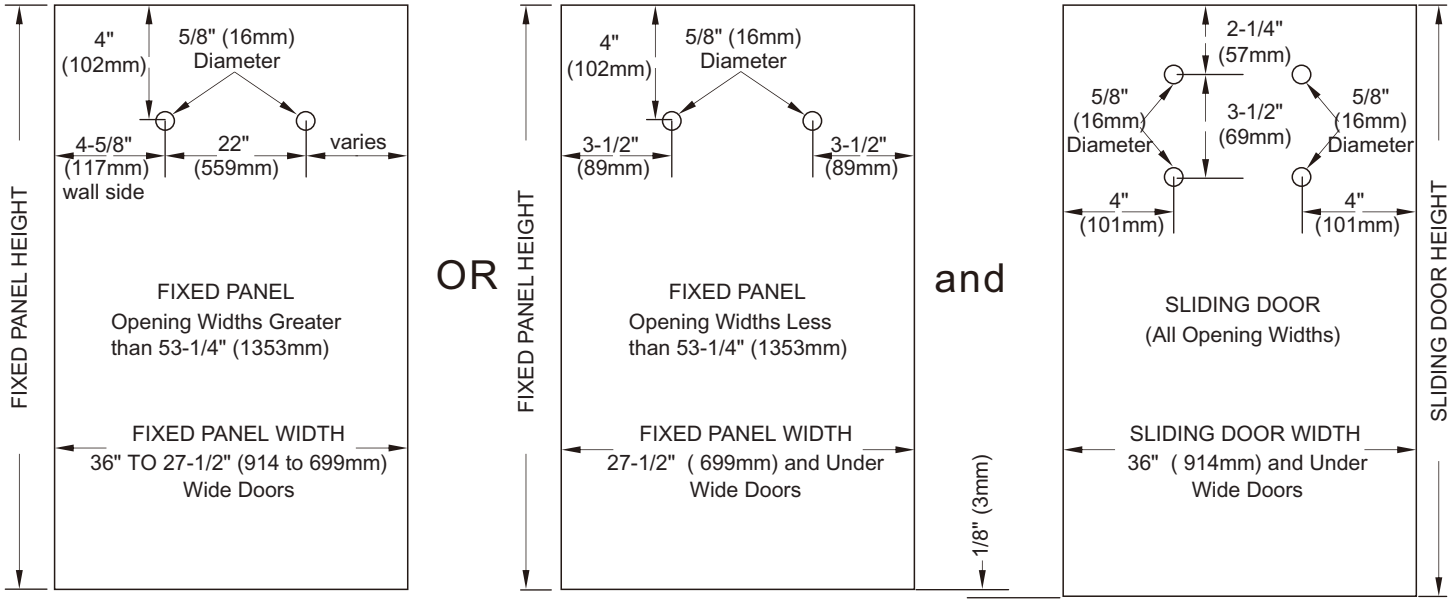

NOTE: For Opening Widths less than 53-1/4" we recommend moving the holes for the Fixed Panel closer to the edge of the glass as shown above.

FIXED PANEL AND SLIDING DOOR HEIGHTS

FIXED PANEL: Overall Height minus 3/16” (5 mm)

SLIDING DOOR: Overall Height minus 5/16” (8 mm)

FIXED PANEL AND SLIDING DOOR WIDTHS

2 EVEN PANELS: Overall Width divided by 2, plus 7/8” (22 mm). NOTE: Fixed Glass Fabrication changes for Openings less than 53-1/4”.

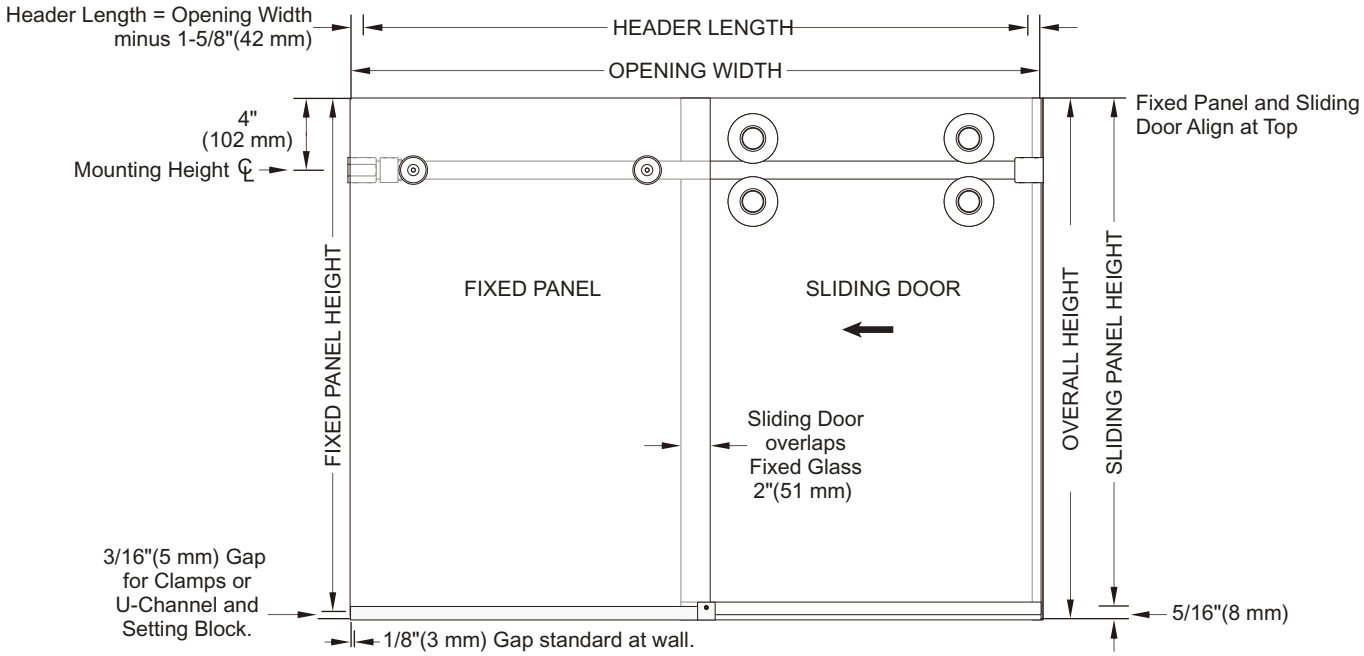

NOTE: Drawings not shown to scale. Track is cut 1-5/8"(42 mm) less than Opening Width and centered in opening. Overall Height is height from curb/floor to top of glass. Drawings shown from interior.

FORGE
TOOLS AND HARDWARE

www.forgetools.net

INSTALLATION INSTRUCTIONS

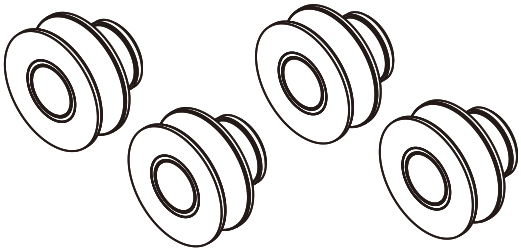

CRER2
Rollers (Four Each) Exterier View

SLIDING DOOR PREPARATION

Unpack Rollers

① Unpack and partially disassemble two sets of Rollers.

NOTE: Rollers shipped assembled.
5 mm Allen Wrench included.

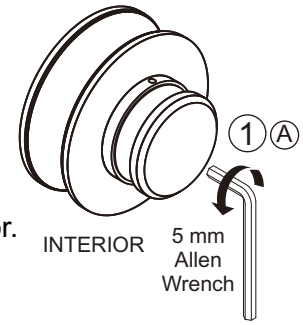

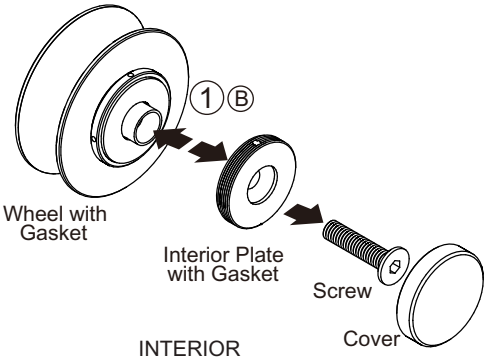

Install Top Rollers

② Adjust wheel height.

③ Install Top Rollers on Sliding Door.

NOTE: Lower Rollers are installed
after door is hung. See Page 10.

Install Bottom Sweep

④ Cut Bottom Sweeps to door width and fit on the bottom of door.

NOTE: Select one of two sizes of included Sweeps.

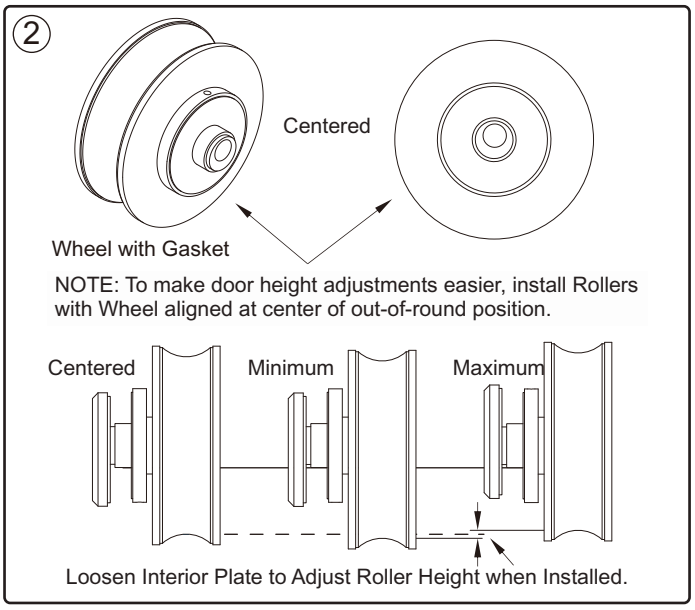

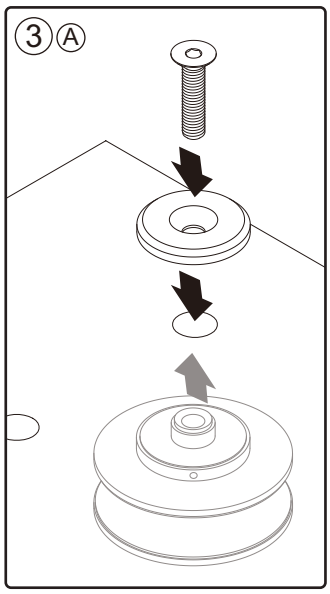

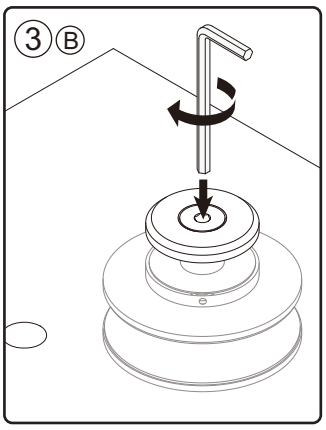

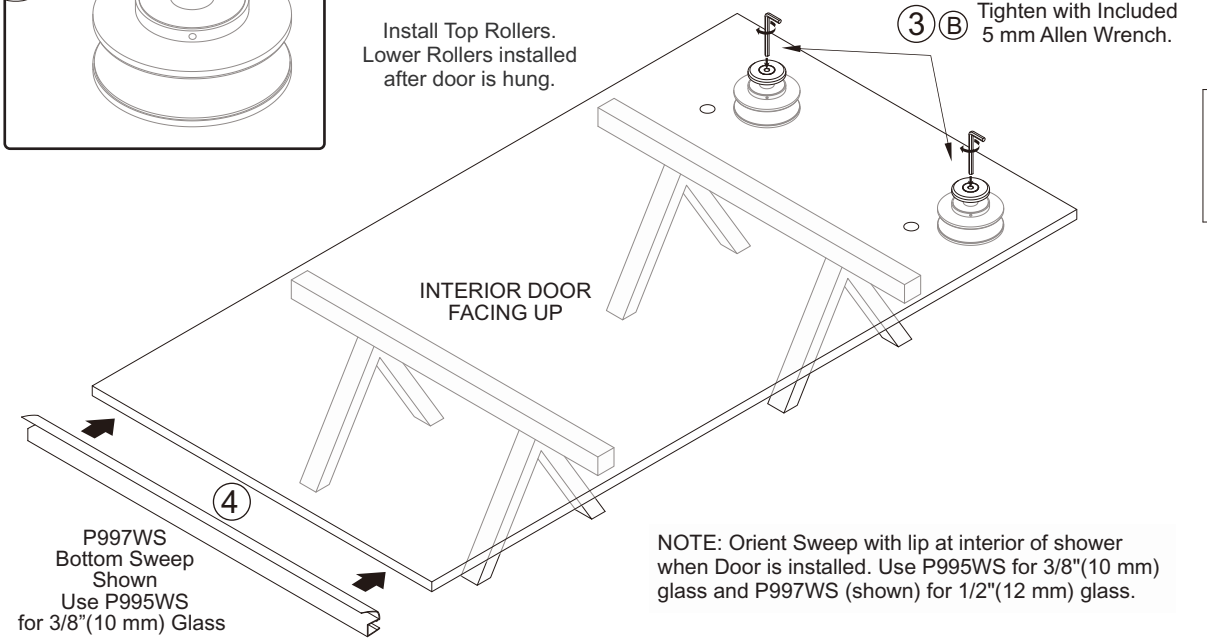

NOTE: Orient Sweep with lip at interior of shower when Door is installed. Use P995WS for 3/8"(10 mm) glass and P997WS (shown) for 1/2"(12 mm) glass.

www.forgetools.net

SITE PREPARATION

Mark Location for Header Support Bar

① Mark and drill holes for Header Support Bar.

NOTE: Header Support Bar is not centered between Sliding Door and Fixed Panel. When installing Fixed Panel to exterior (traditional placement) allow at least 1-3/8" (35 mm) from edge to install Bottom Guide.

② Measure opening width at mounting points.

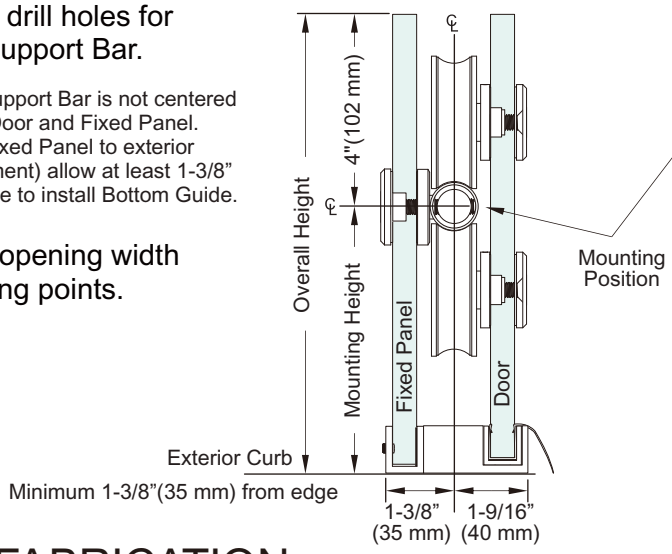

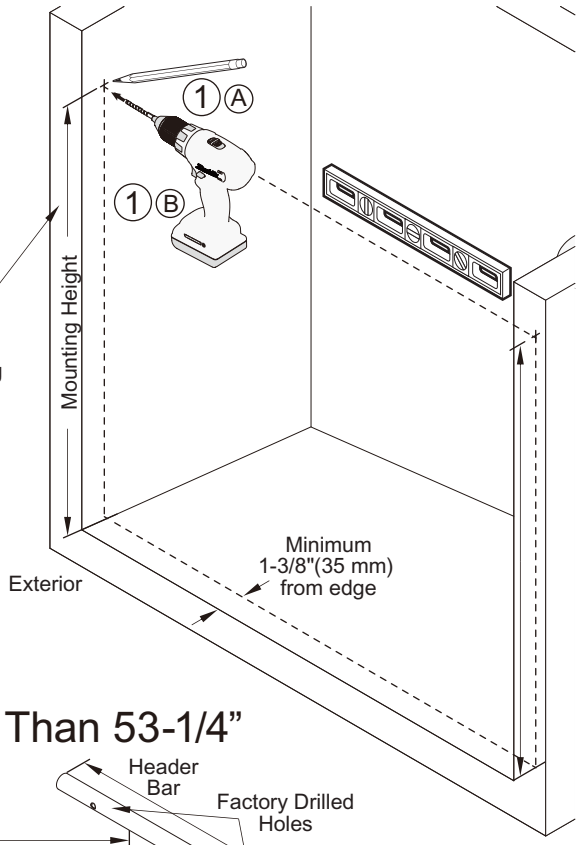

FRAME FABRICATION

Prepare Header Bar: Opening Width Greater Than 53-1/4"

③ Cut CREH1 Header Bar from end without holes.

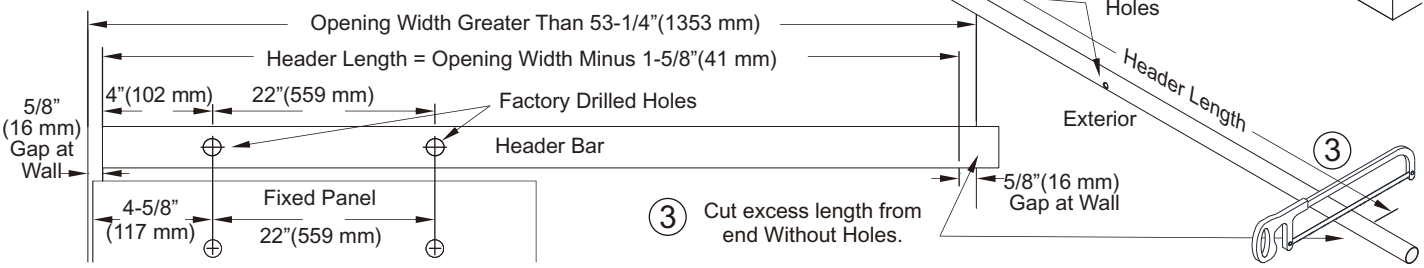

NOTE: Header Support Bar is cut 1-5/8"(41 mm) short from tight dimension and centered in opening.

NOTE: Header Bar is made of stainless steel. Use hacksaw or special cutting tool.

Prepare Header Bar: Opening Width Less Than 53-1/4"

④ Cut excess length from CREH1 Header Bar from both ends.

NOTE: Remove Grommet at first hole before cutting. Header Bar is made of stainless steel. Use hacksaw or special cutting tool.

⑤ Drill second hole for Fixed Panel Fitting and reinstall Grommet.

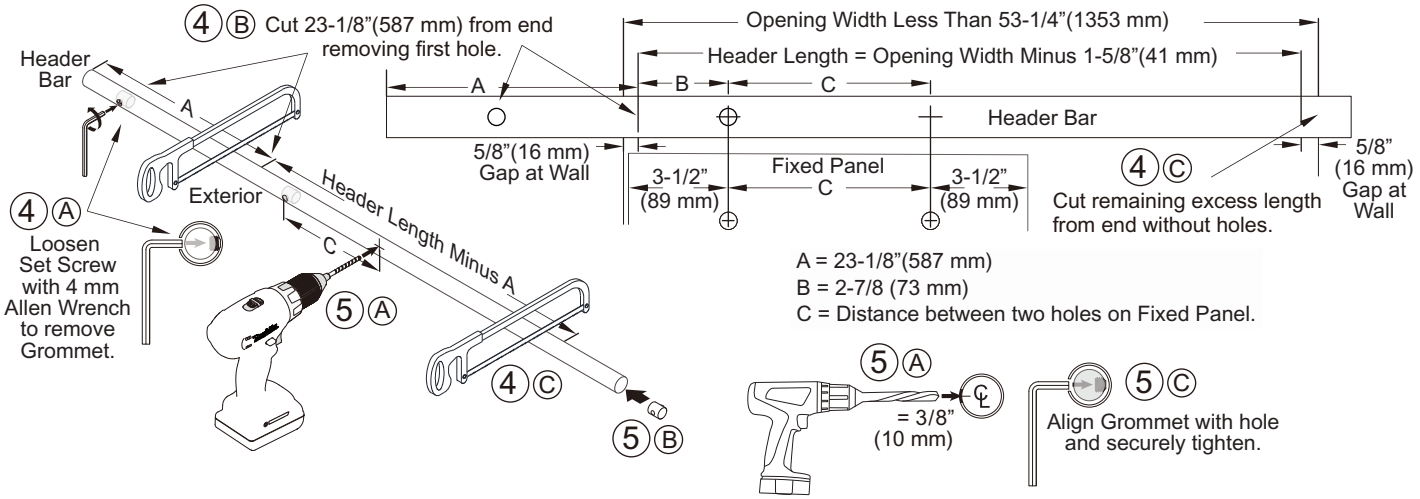

FORGE
TOOLS AND HARDWARE

www.forgetools.net

INSTALLATION INSTRUCTIONS

FRAME INSTALLATION

Mount Track Holder Fittings

① Unpack Track Holder Fittings. Loosen Set Screws and remove Mounting Blocks.

② Fasten Mounting Blocks to wall.

Install Stopper

③ Unpack and loosen Set Screws on top and bottom of Stopper.

Install Header

④ Slide Stopper and Track Holder Fittings onto Header.

NOTE: Orient Stopper with Rubber Bumpers facing center and Track Holder Fittings with rounded end facing center.

⑤ Align Header with Mounting Block. Slide Track Holder Fittings to wall and tighten Set Screws to secure.

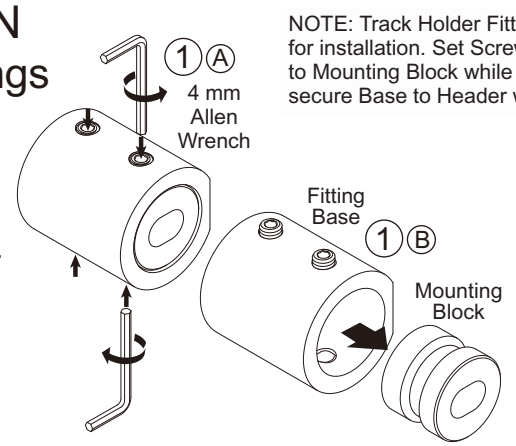

NOTE: Track Holder Fittings shown orientated for installation. Set Screws at end hold Base to Mounting Block while second Set Screws secure Base to Header when installed.

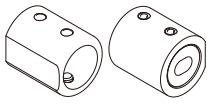
CREW1
Track Holder Fitting


Screws and Anchors

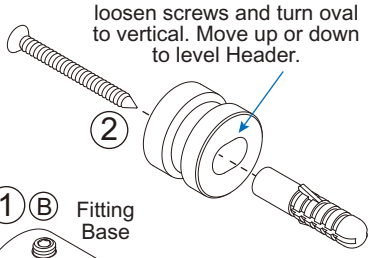

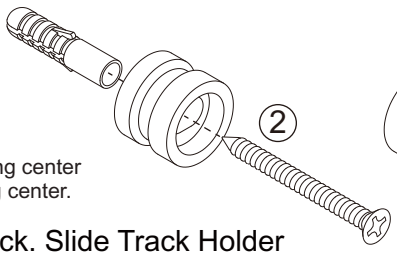

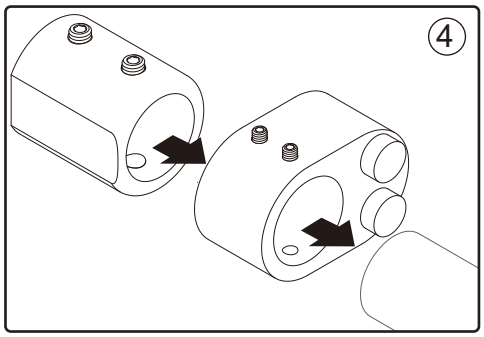

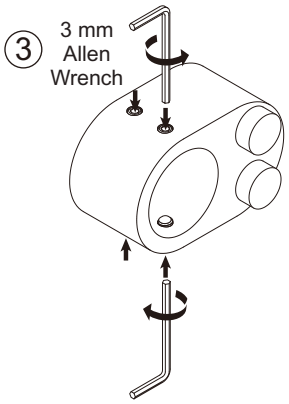

CRES1
Stopper

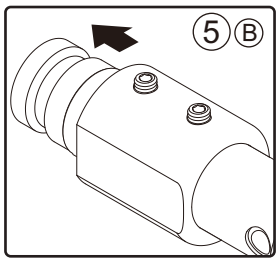

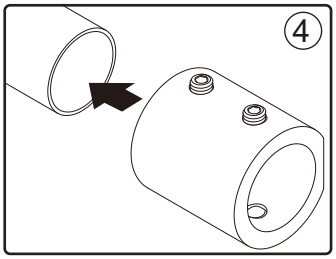

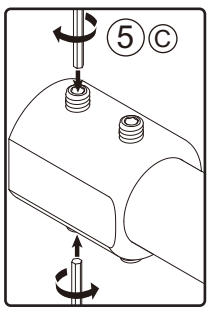

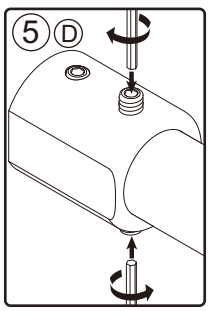

NOTE: Ensure Header is level. If not, loosen screws holding Mounting Blocks to adjust height.

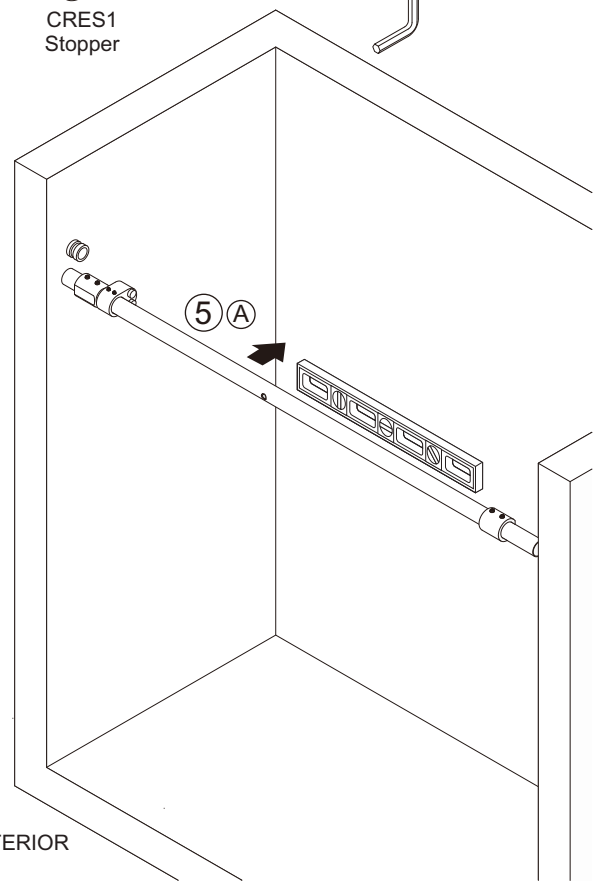

FRAME INSTALLATION (CONTINUED)

Bottom Guide Mounting Options and U-Channel Preparation (Optional)

NOTE: Fixed Panel may be fastened to curb with clamps. Use dimensions shown below to calculate length of U-Channel for each mounting option.

① Determine Bottom Door Guide mounting option.

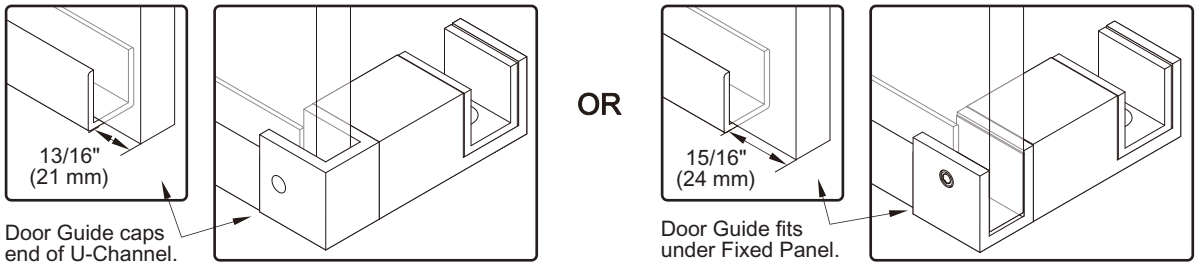

Unpack and Prepare Bottom Door Guide

② Unpack Bottom Door Guide. Rotate orientation if needed. (Optional)

NOTE: Door Guide shipped oriented to cap Fixed Panel on right. Loosen bottom Set Screw and rotate base to change orientation. Select smaller of two included inserts.

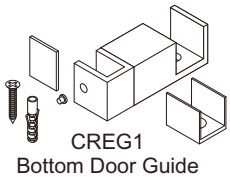

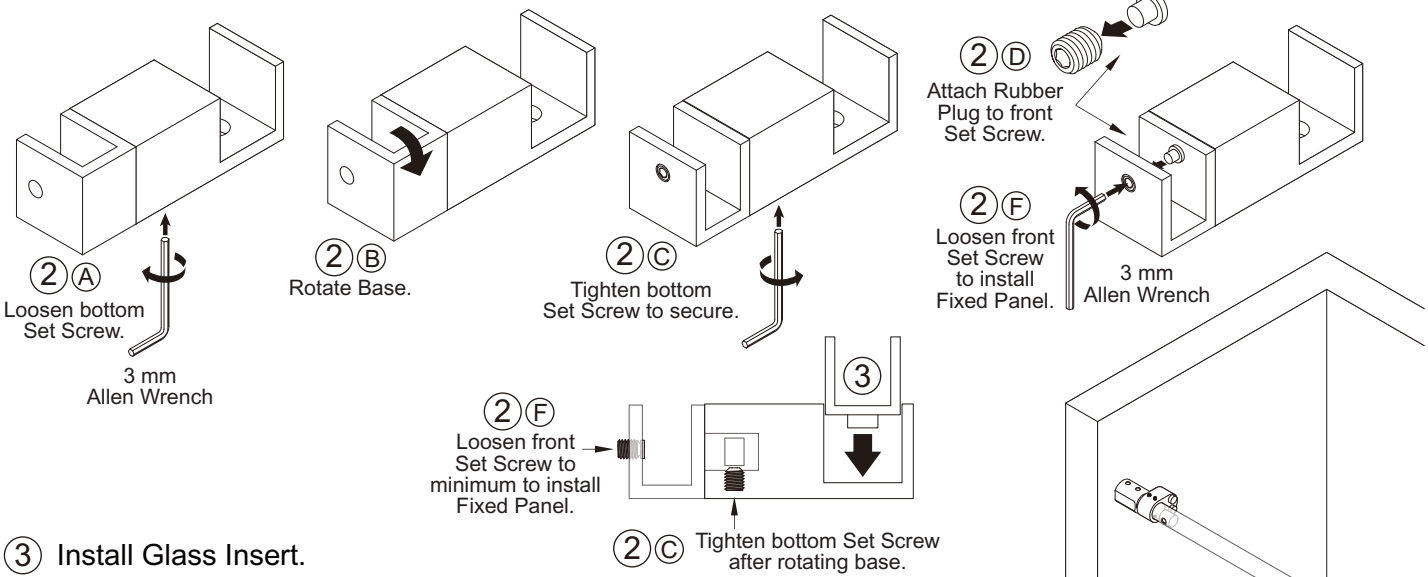

③ Install Glass Insert.

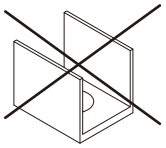

NOTE: Discard Larger Insert used with 5/8"(16 mm) glass.

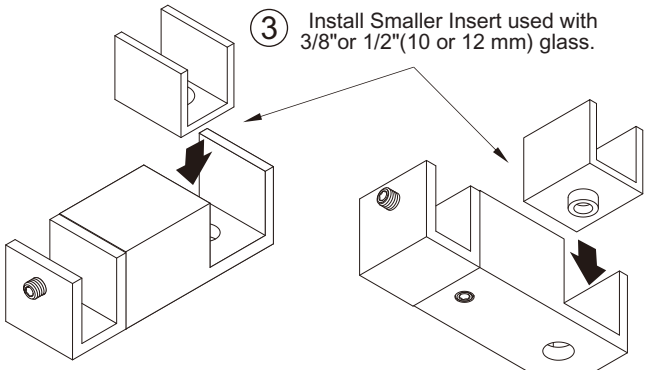

Install Fixed Panel Curb Mounts

④ Mount Clamps or U-Channel on curb.

NOTE: Door Guide installed after Sliding Door is hung. Door Guide positioned under Fixed Panel shown in installation in this manual.

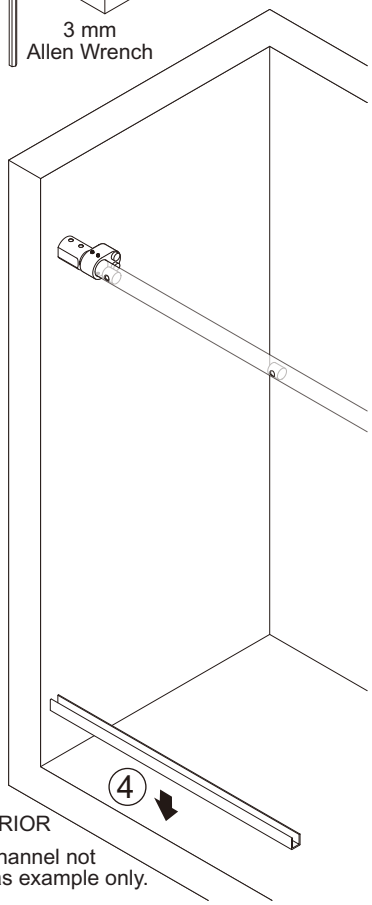

NOTE: U-Channel not included. Shown as example only.

FRAME INSTALLATION (CONTINUED)

Install Fixed Panels

1. Unpack and disassemble Fixed Panel Fittings.
2. Attach Fixed Panel Fittings to Fixed Panel.
3. Align Fittings with Grommets in Header Bar. Securely fasten.

NOTE: If Grommets are not centered, loosen Track Holder Set Screws and rotate Header Bar.

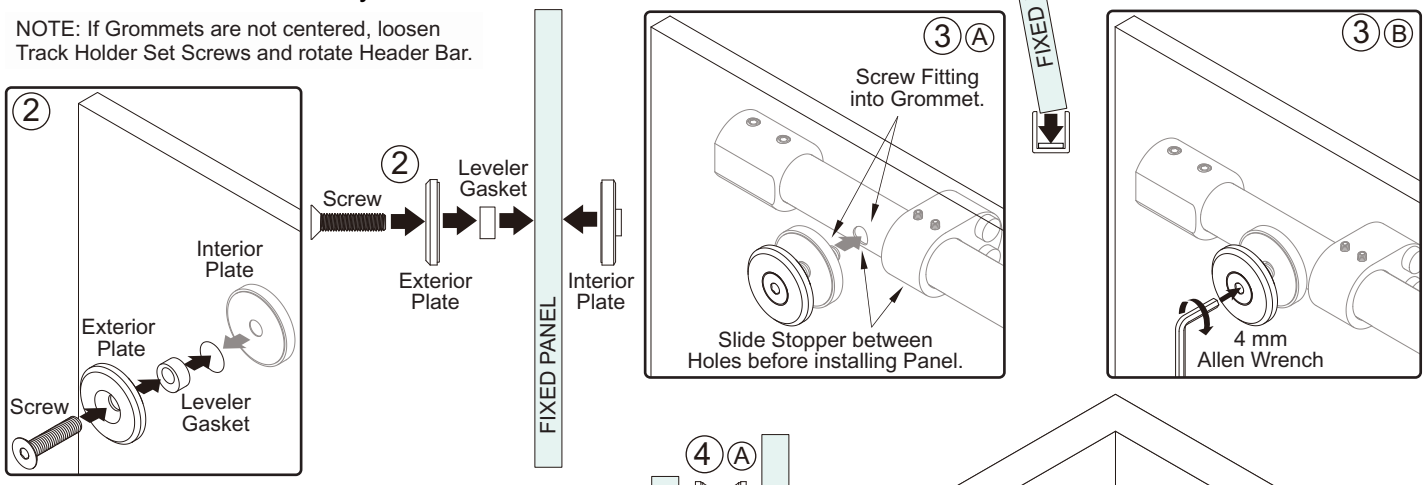

Place Bottom Door Guide

4. Hang Sliding Door and carefully slide back and forth to check height.

NOTE: See Page 5 to Prepare Door before hanging and to adjust Roller height if needed.

5. Place Door Guide to engage with Sliding Door. Close Door, adjust Guide position and outline.

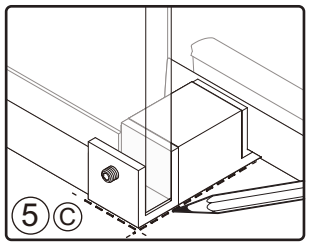

6. Remove Door to mark hole.
7. Remove Guide. Drill hole and insert anchor.

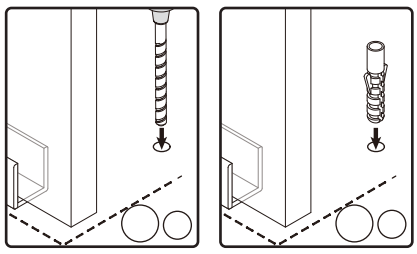

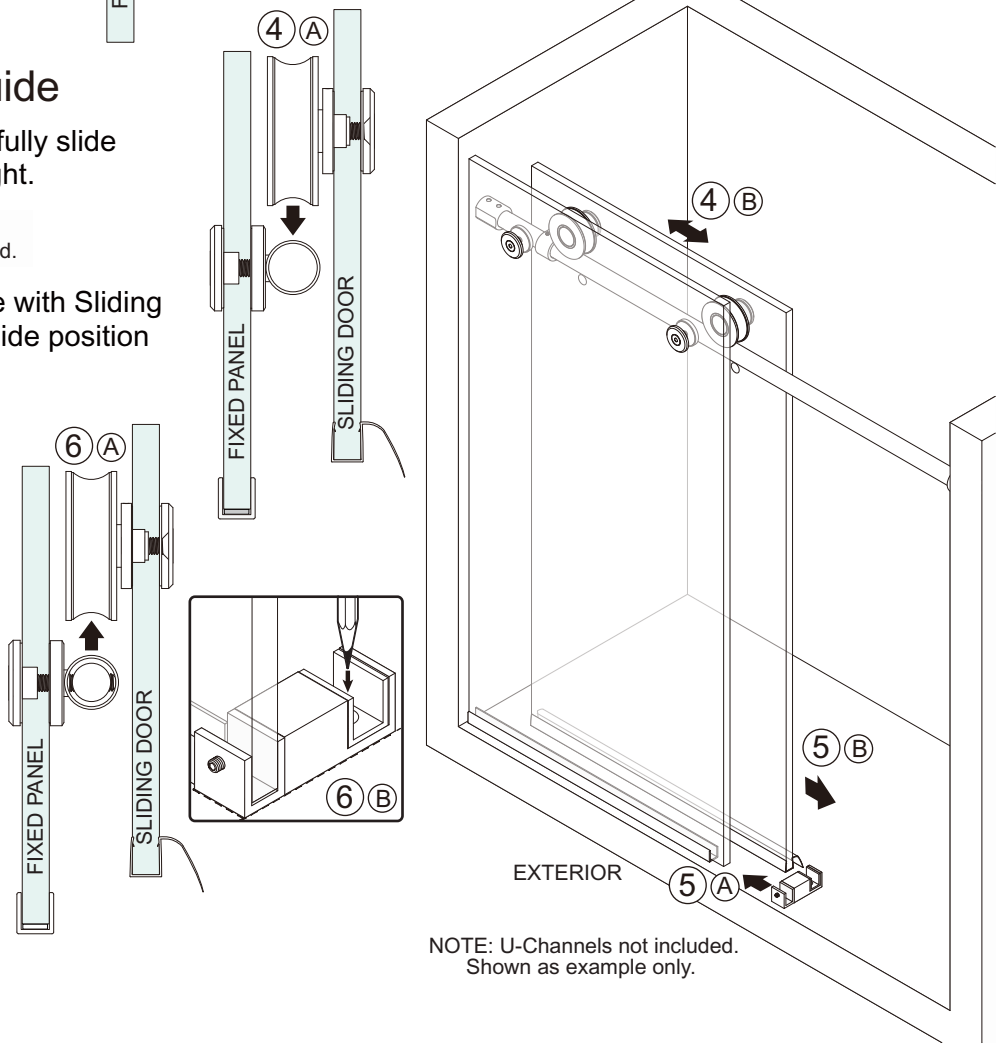

www.forgetools.net

FRAME INSTALLATION (CONTINUED)

Install Bottom Door Guide

① Fasten Bottom Door Guide and tighten Set Screw at Fixed Panel.

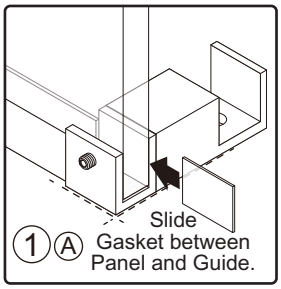

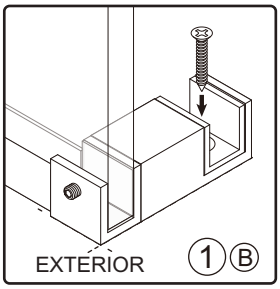

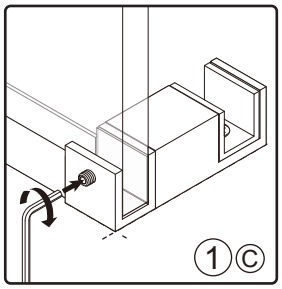

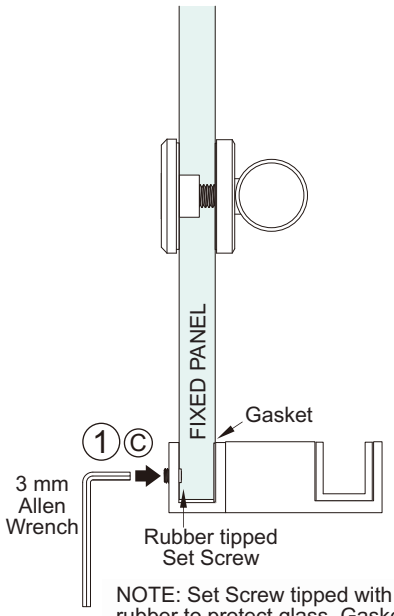

NOTE: Set Screw tipped with rubber to protect glass. Gasket provided for other side of Panel.

SLIDING DOOR INSTALLATION

Hang Sliding Door

② Hang Sliding Door placing Glass inside Bottom Guide.

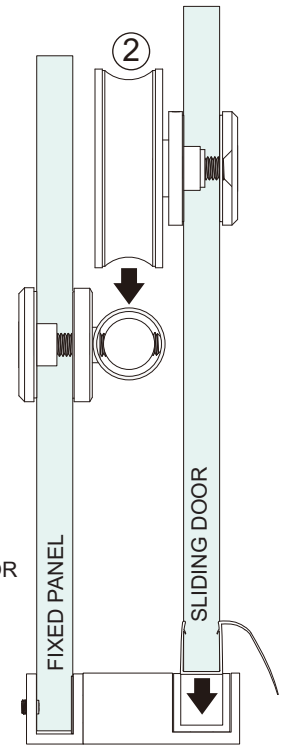

Install Bottom Rollers

③ Prepare and install Bottom Rollers.

NOTE: See Page 5 before installing Rollers.

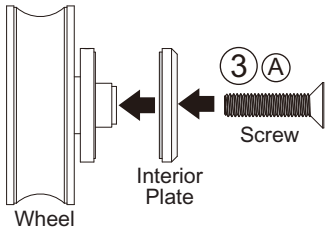

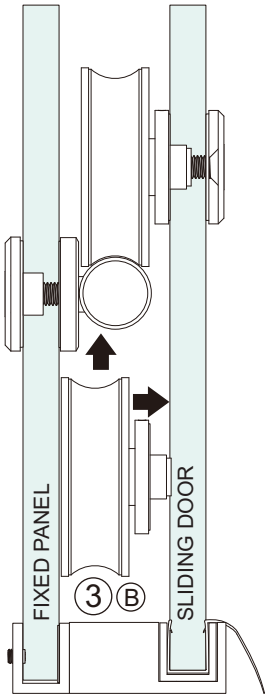

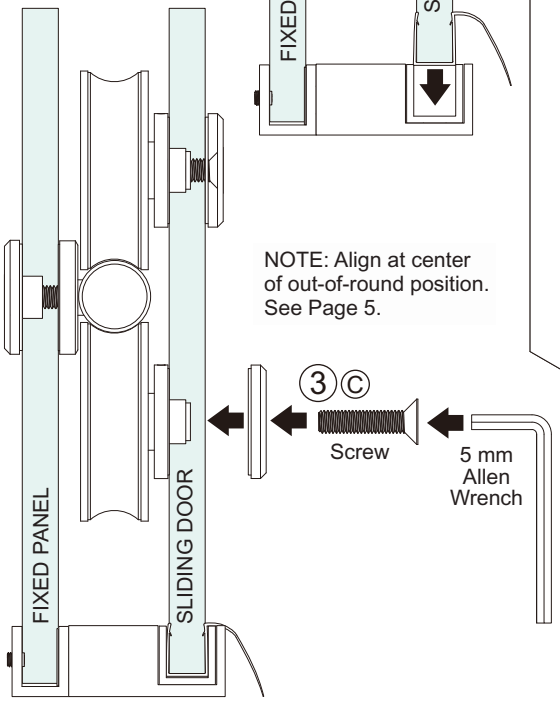

NOTE: Align at center of out-of-round position. See Page 5.

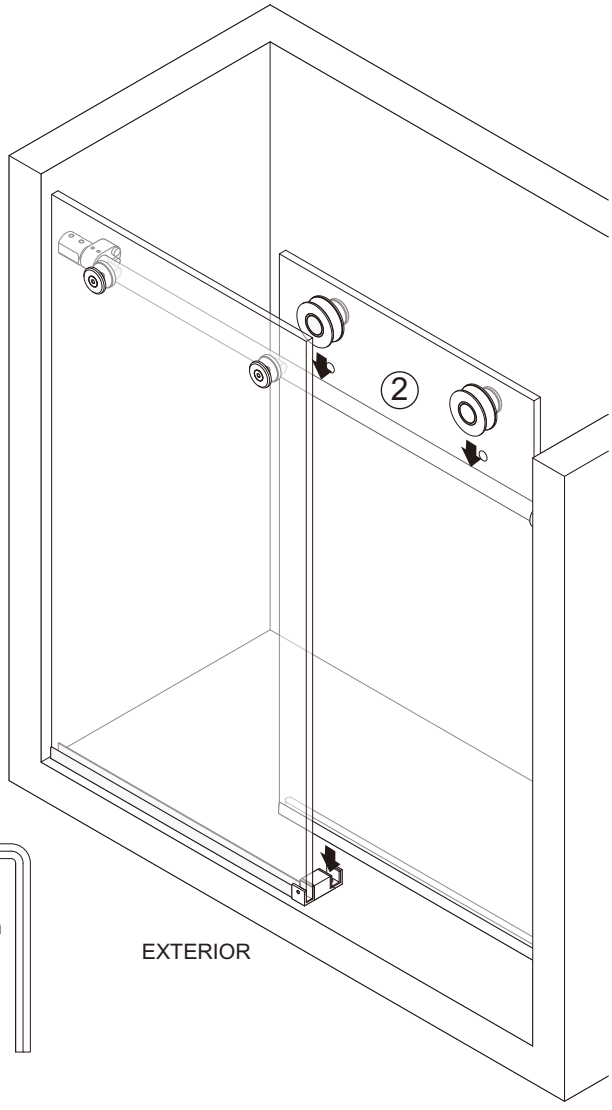

www.forgetools.net

FINISHING

Adjust Stopper Position

① Position Door Stop and secure.

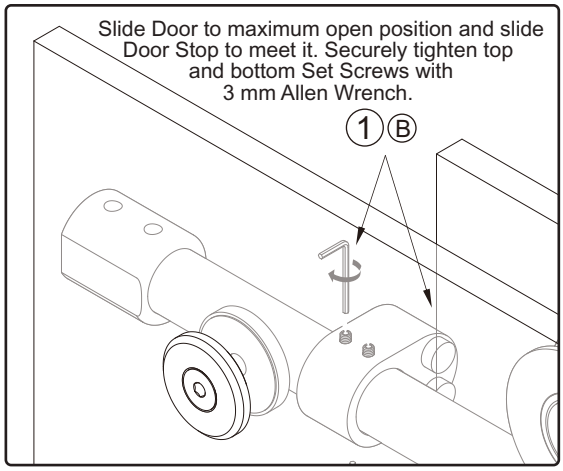

Install L-Seal

② Cut and install L-Seal.

NOTE: Temporarily attach L-Seal to Sliding Door. Use as guide for final position.

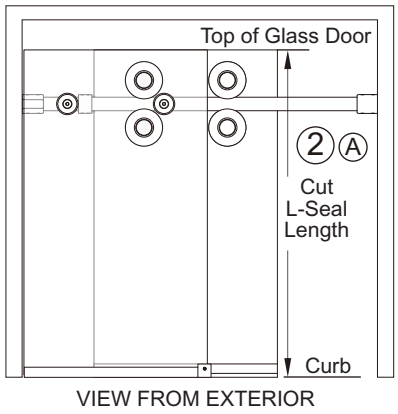

VIEW FROM EXTERIOR

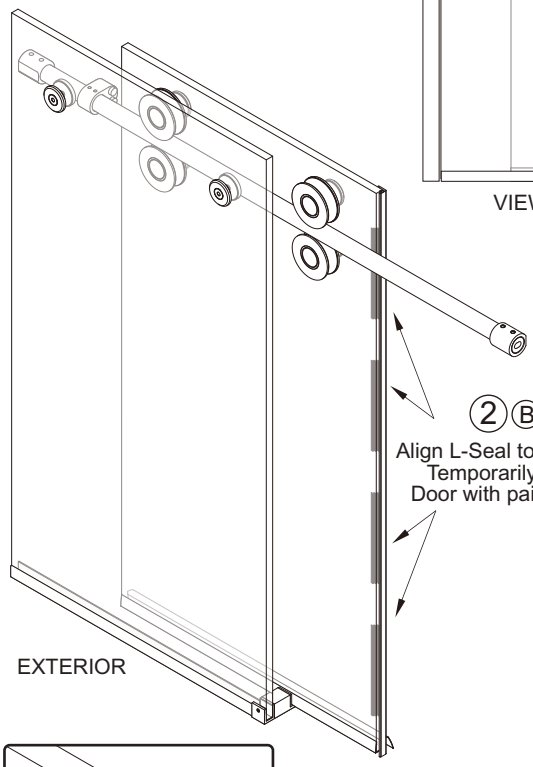

EXTERIOR

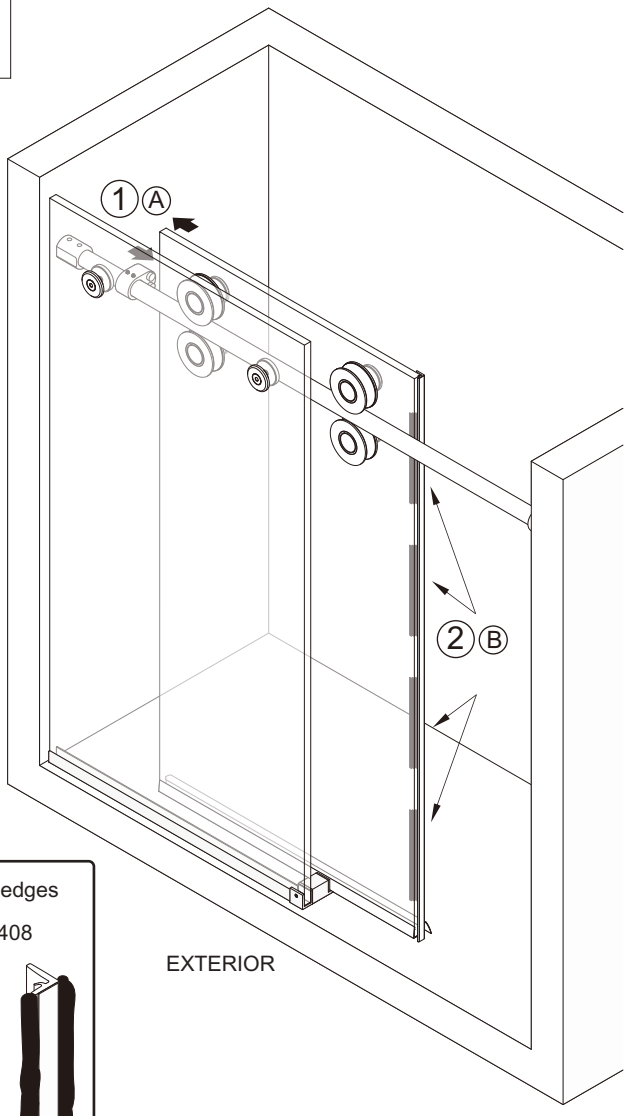

EXTERIOR

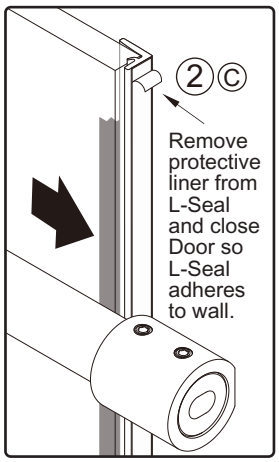



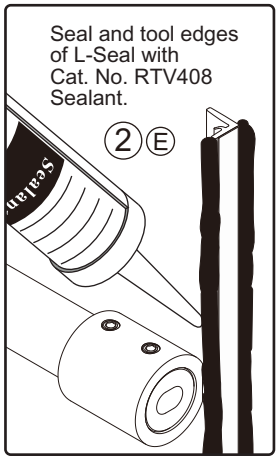

90° RETURN PANEL
SSTF90 ACCESSORY KIT

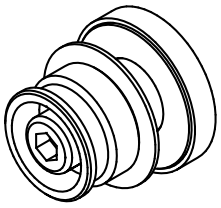

CRE90 INDIVIDUAL COMPONENT LIST:

(1) CAP114 STAINLESS STEEL CAP ASSEMBLY

(1) AS5162 5/16-18 x 2” HEX HEAD SET SCREW

(1) LW516S STAINLESS STEEL LOCK WASHER

(1) NLN51618S STAINLESS STEEL LOCK NUT

STEP 1:

USING THE CAP ASSEMBLY KIT WITH THE 2” HEX HEAD SET SCREW FIRMLY ATTACHED AND THE MOLDED WASHER IN PLACE, INSERT THE CAP ASSEMBLY THROUGH THE FABRICATED GLASS RETURN PANEL, FOLLOWED BY THE FLAT PLASTIC WASHER TO PREVENT GLASS TO METAL CONTACT.

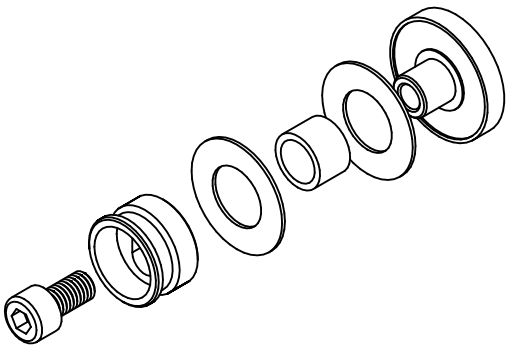

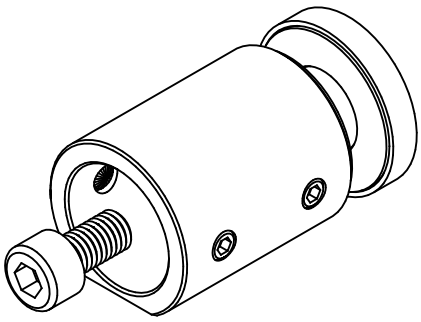

STEP 2:

MOUNT THE WALL FITTING PROVIDED WITH THE SHOWER KIT, ADD LOCK WASHER FIRST, FOLLOWED BY THE LOCK NUT, AND FASTEN SECURELY. INSTALLATION IS NOW COMPLETE.

CRE90 EXPLODED VIEW OF COMPLETED INSTALLATION

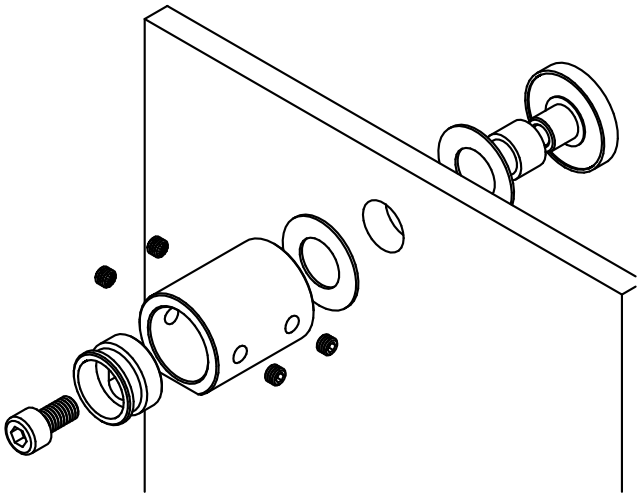

WALL MOUNT FITTING NOT INCLUDED
WITH 90° ACCESSORY KIT

The return panel hole location varies depending on the glass thickness and shower configuration

1/2" GLASS

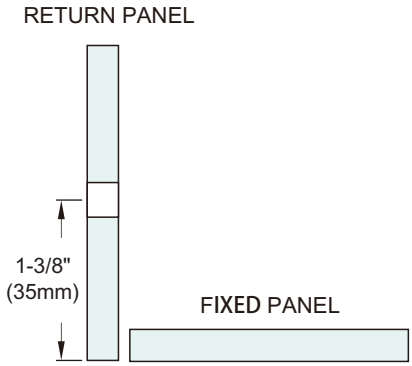

3/8" GLASS

