FORGE
TOOLS AND HARDWARE
www.forgetools.net

INSTALLATION INSTRUCTIONS

GLIDE SERIES

SQUARE DOUBLE SLIDING DOOR KIT



Email: info@forgetools.net **www.forgetools.net**

www.forgetools.net

INSTALLATION INSTRUCTIONS

PARTS LIST

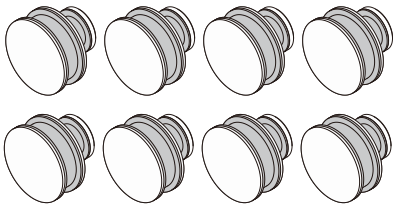

CAMR4
Roller (Eight Included in Kit)

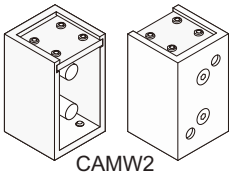

CAMW2
Track Holder Fitting
(Two Included)

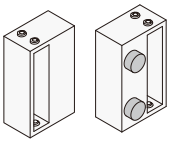

CAMS1
Stopper

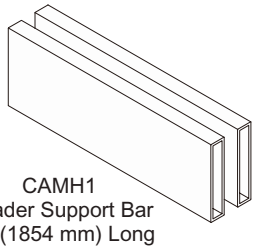

CAMH1
Header Support Bar
73” (1854 mm) Long



Screws and Anchors



Screws and Anchors



Adjustable
Spanner Wrench

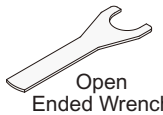

Open
Ended Wrench

(Included in Tool Kit. Use to install Rollers.)

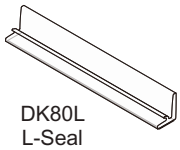

DK80L
L-Seal
80” (2032 mm) Long
(Two Included)

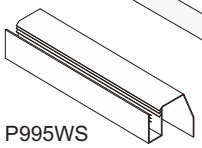

P995WS
Bottom Sweep
40” (1016 mm) Long
(Two Included)

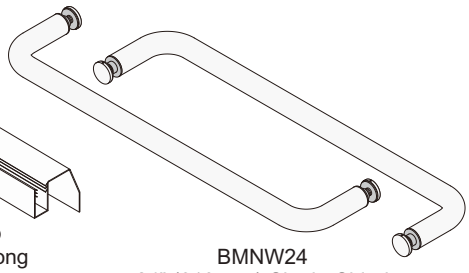

BMNW24
24” (610 mm) Single-Sided
Towel Bar
(Two Included)

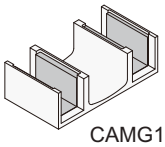

CAMG1
Bottom Guide



1.5 mm
Allen Wrench
(Use with Towel Bar)



3 mm
Allen Wrench
(Use with Stopper and
Track Holder Fitting)

SPECIFICATIONS

Drawing not to scale. Shown from exterior.

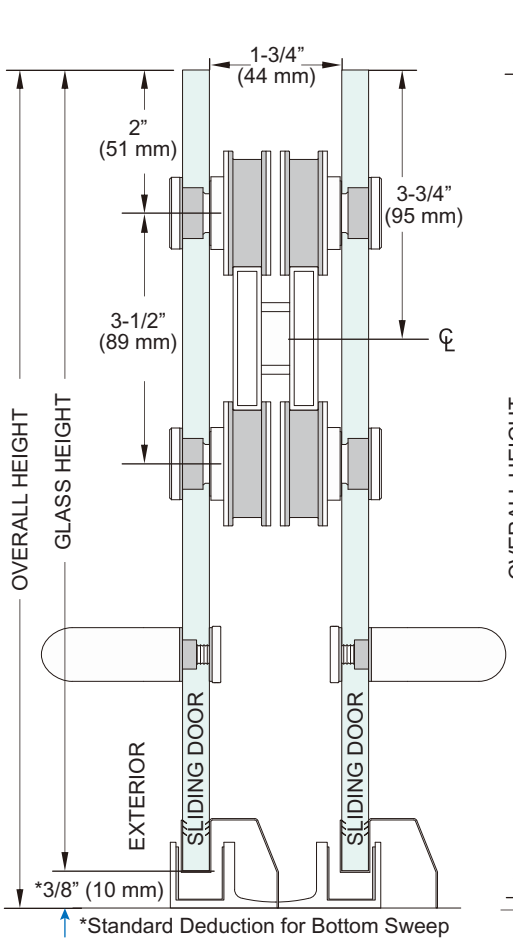

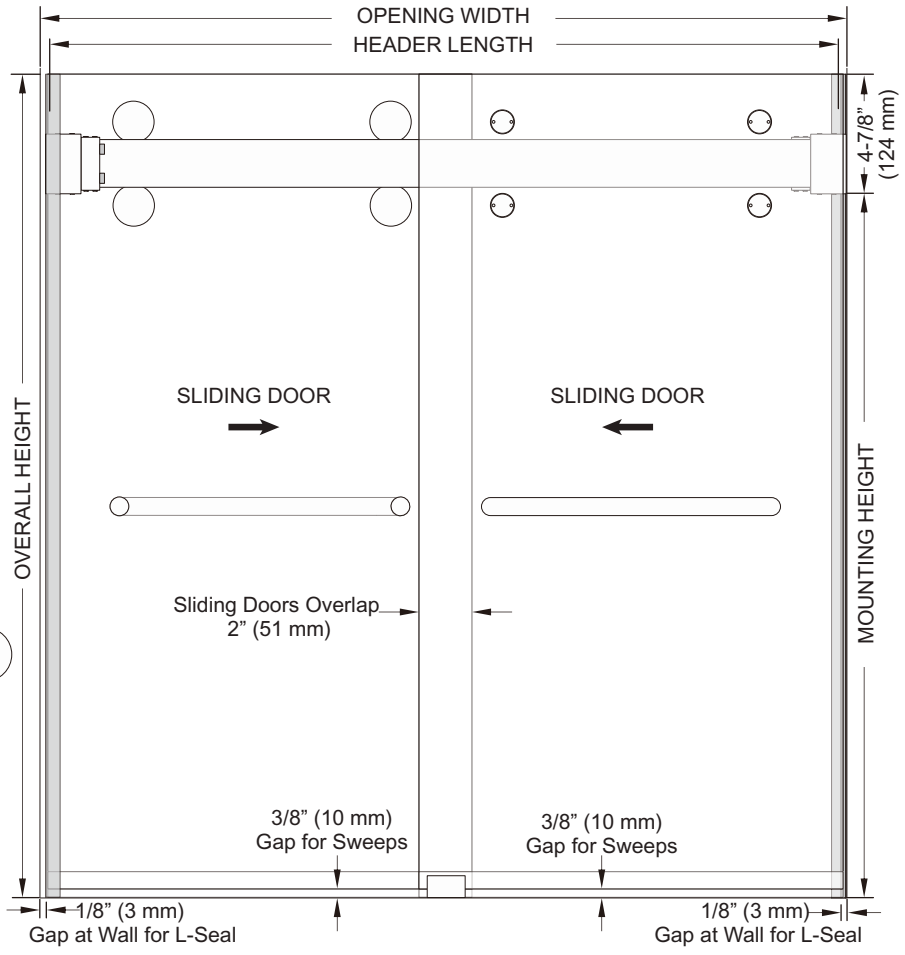

GLASS FABRICATION

Use 5/16” or 3/8” (8 or 10 mm) Tempered Glass only. Do not use Laminated Glass.

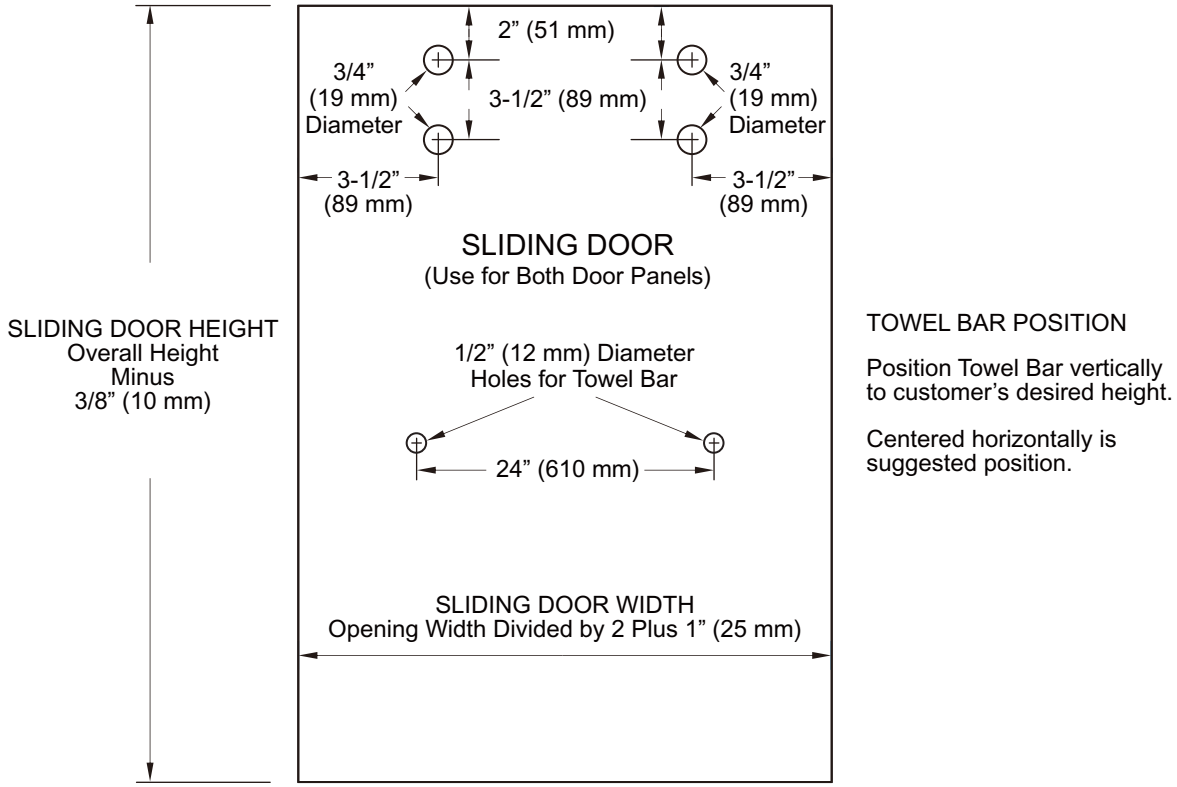

SLIDING DOOR HEIGHT: Overall Height minus 3/8” (10 mm)
SLIDING DOOR WIDTHS: Overall Width divided by 2, plus 1” (25 mm).

Drawing not to scale. Shown from exterior.

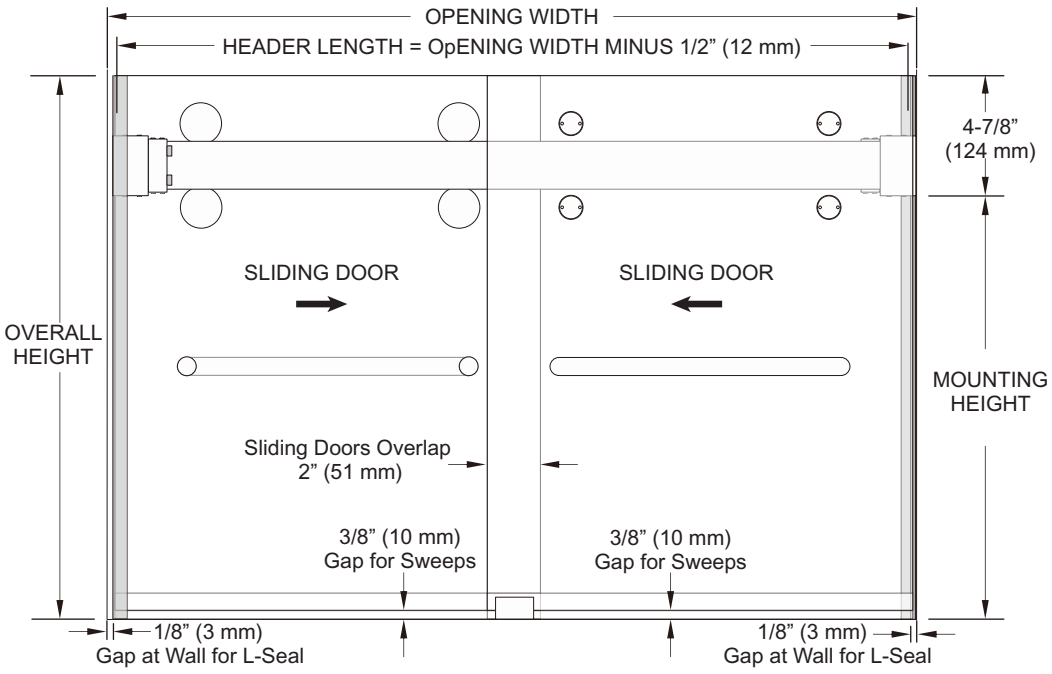

NOTE: Drawings not shown to scale. Header Bar is cut 1/2” (12 mm) less than Opening Width.
Use wall-to-wall tight dimension.Overall Height is height from curb/floor to top of glass.

SLIDING DOOR PREPARATION

Unpack Rollers

① Unpack and partially disassemble four sets of Rollers.

NOTE: Rollers shipped assembled. tools to install included.





(Included in Tool Kit)

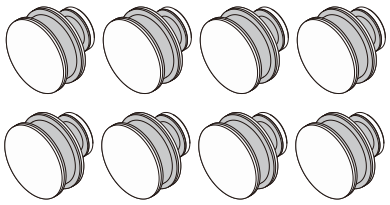

CAMR4
Roller (Eight Each)

Install Top Rollers

② Adjust wheel height.

③ Install Top Rollers on both Sliding Doors.

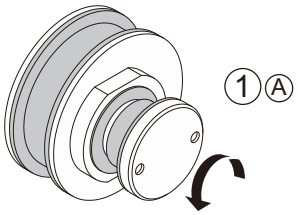

NOTE: Unscrew Interior Plate by hand. If needed, use tools shown in Step 3 to loosen.

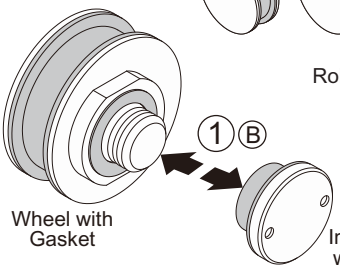

NOTE: Lower Rollers are installed after doors are hung. See Page 10.

Install Bottom Sweep

④ Cut Bottom Sweeps to door width. Fit on the bottom of each door.

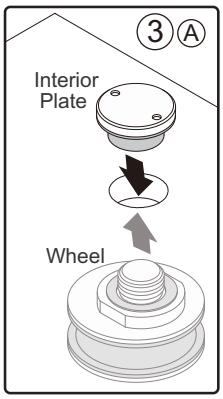

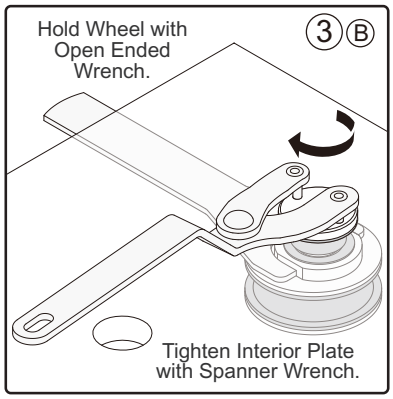

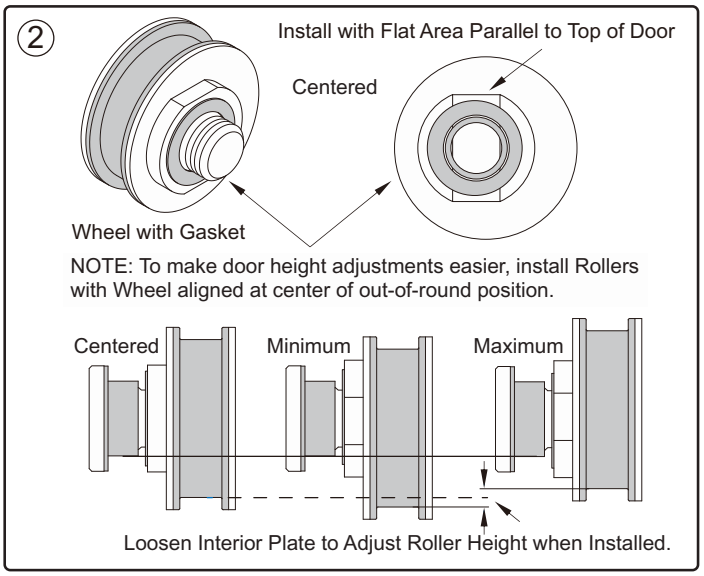

NOTE: Install Top Rollers with flat area of Wheel parallel to top of glass, aligned at center of out-of-round position.

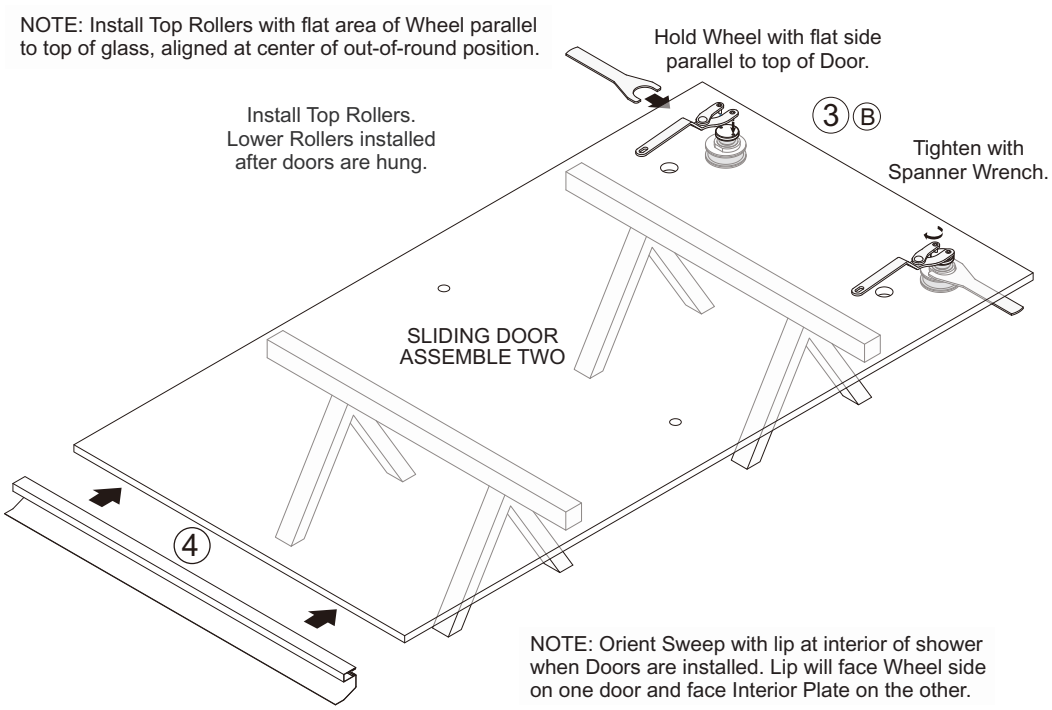

NOTE: Orient Sweep with lip at interior of shower when Doors are installed. Lip will face Wheel side on one door and face Interior Plate on the other.

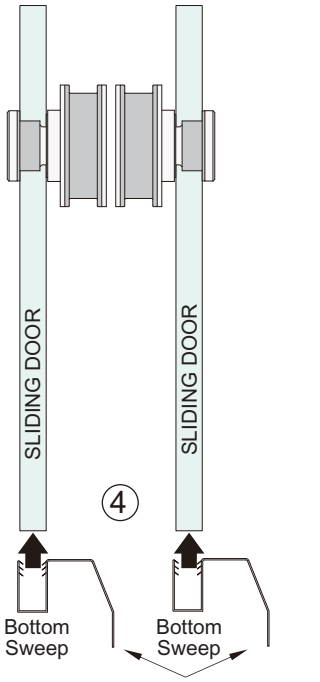

Lip at interior when Doors are hung.

SITE PREPARATION

Prepare for Header Support Bar

NOTE: Track Holder Fittings shown orientated for installation. Set Screws at Top Cover secure Header in place. Set Screws at bottom base adjust Header height if needed after installation.

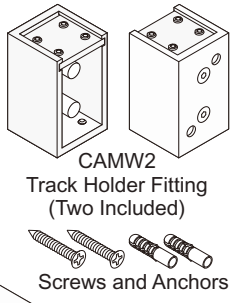

① Determine Mounting Height and mark wall.

NOTE: Allow minimum 1-1/2” (38 mm) from edge of curb.

② Unpack Track Holder Fittings. Remove top cover.

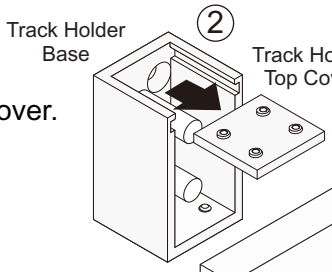

③ Using Track Holder Fitting Base as a guide, mark and drill holes for Header Support Bar.

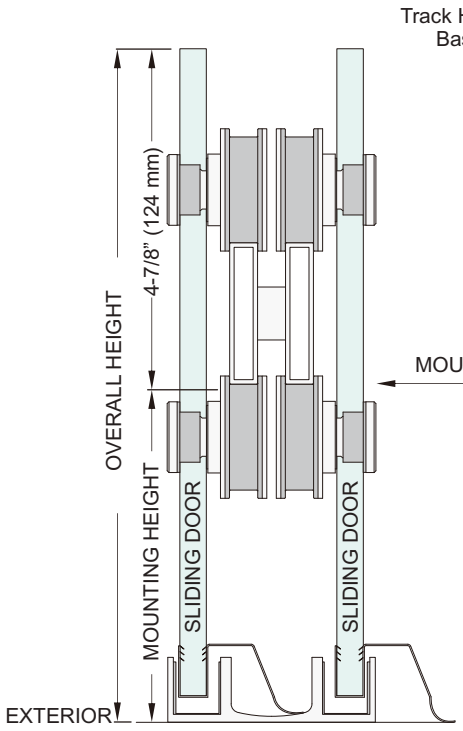

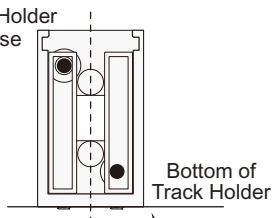

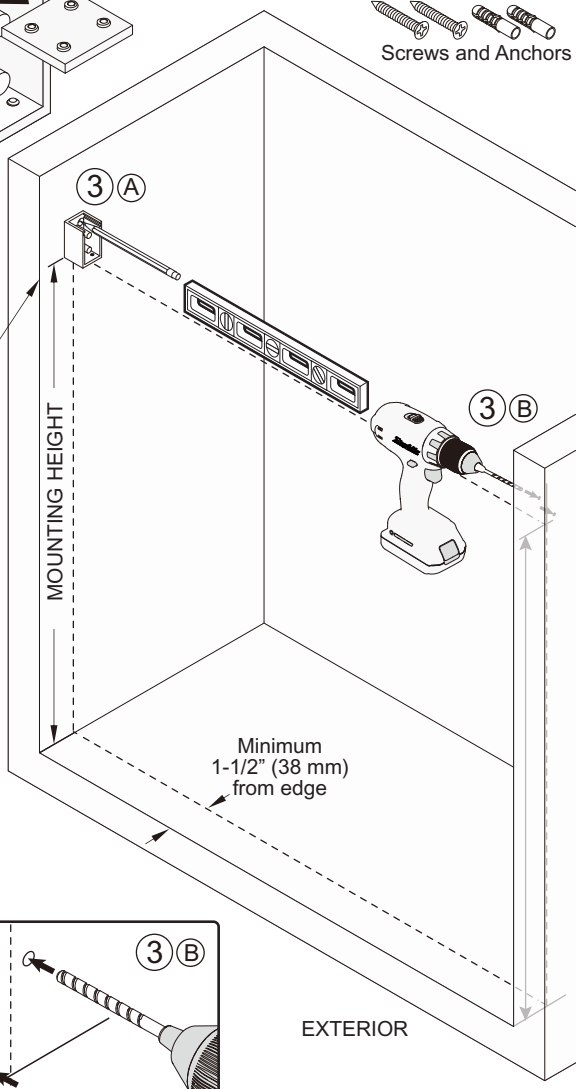

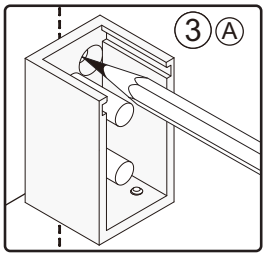

FRAME FABRICATION

Cut Header Support Bar

④ Measure opening width at mounting points. Cut CAMH1 Header Support Bar 1/2” (12 mm) shorter.

NOTE: Header Support Bar is made of stainless steel. Use hacksaw or special cutting tool.

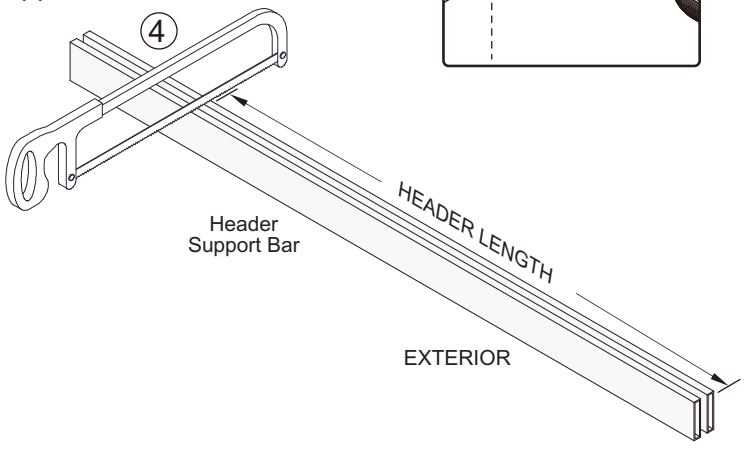

FRAME INSTALLATION

Mount Track Holder Fittings

① Fasten Mounting Blocks to wall.

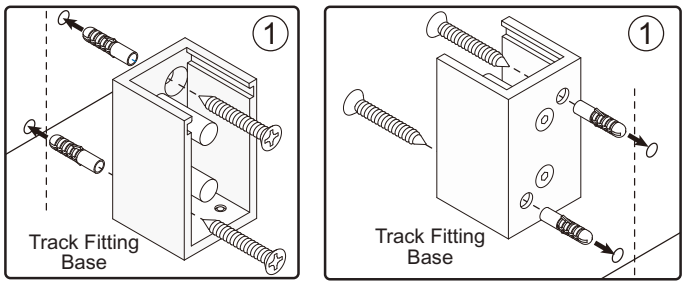

Install Door Stoppers

② Unpack and loosen Set Screws on Door Stoppers. Slide onto Header. Do not tighten.

NOTE: Position Stoppers with Rubber Bumpers facing back of door in open position. Secure in place after Header is installed.

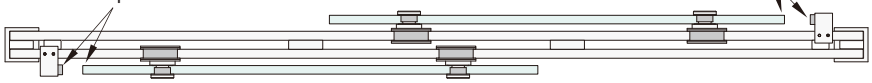

Install Header

③ Rest Header onto Track Fittings.

④ Slide Fitting Cover into Fitting Base. Tighten Set Screws to secure Header in place.

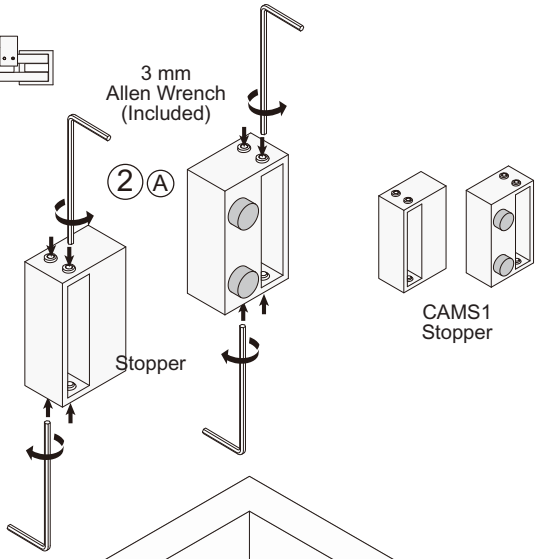

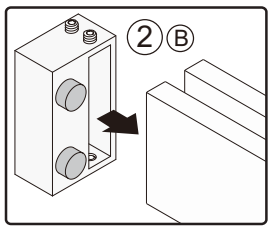

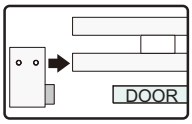

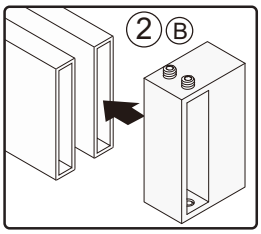

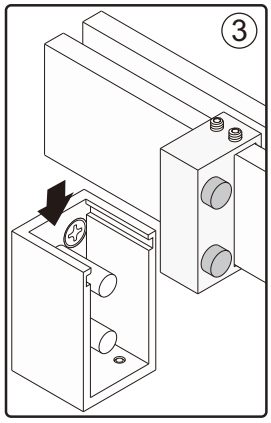

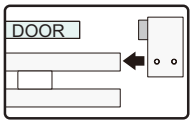

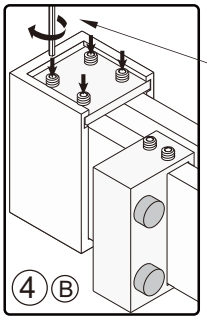

3 mm
Allen Wrench
(Included)

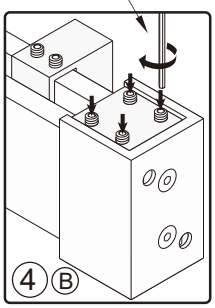

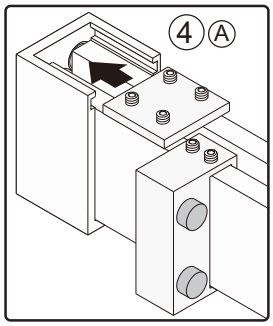

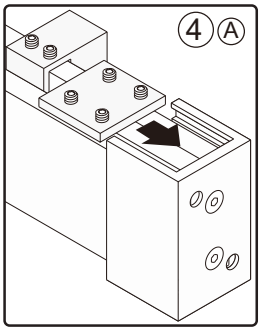

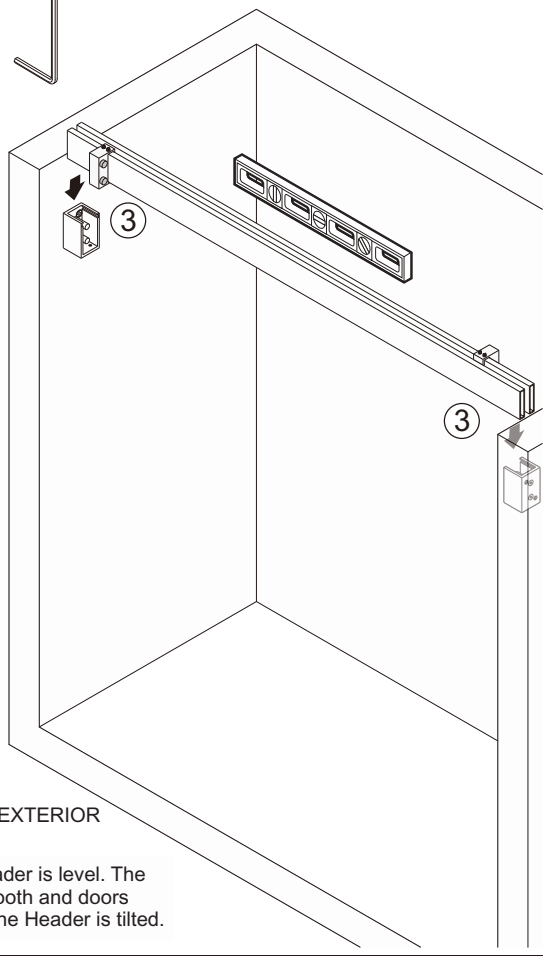

IMPORTANT: Ensure Header is level. The Rollers are extremely smooth and doors will move on their own if the Header is tilted.

FRAME INSTALLATION (CONTINUED)

Hang Sliding Doors

① Hang Sliding Doors and carefully slide back and forth to check height.

NOTE: See Page 5 to Prepare Doors before hanging and to adjust Roller height if needed.

Install Bottom Door Guide

② Place Bottom Guide to engage with Sliding Doors. Close Doors, adjust Guide position and outline.

③ Remove Doors and Guide Inserts to mark holes.

④ Remove Guide. Drill hole and insert anchors.

⑤ Reassemble Guide and install.

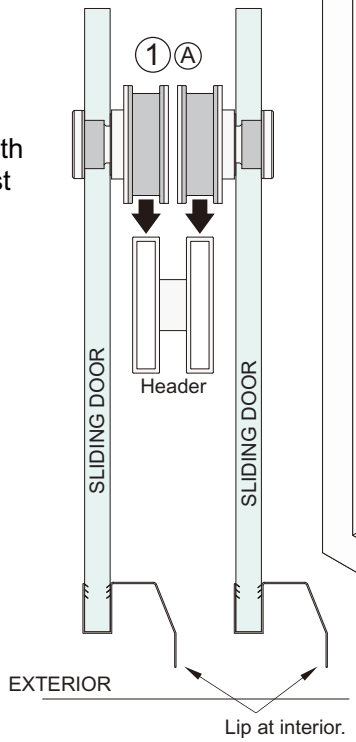

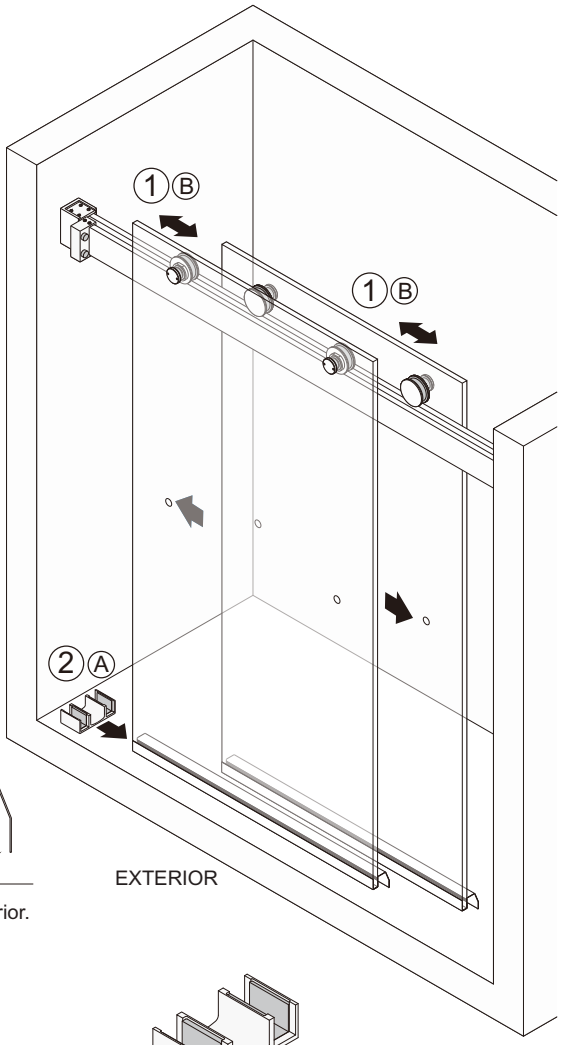

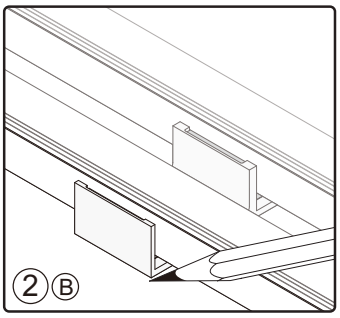

CAMG1
Bottom Guide


Screws and Anchors

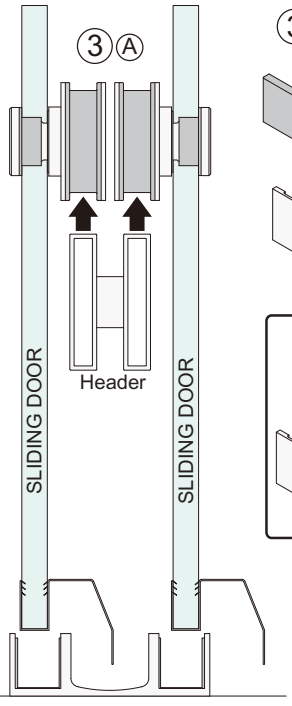

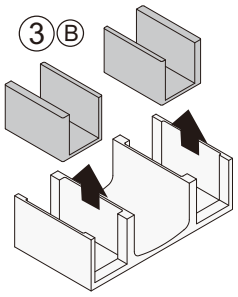

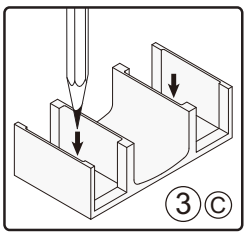

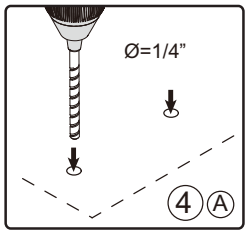

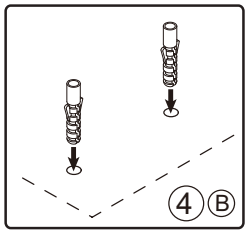

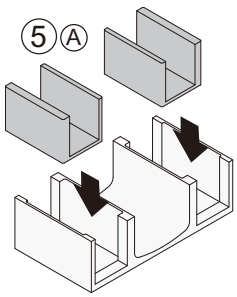

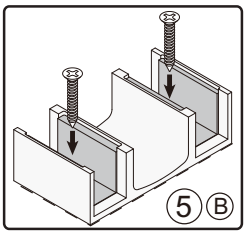

SLIDING DOOR INSTALLATION

Hang One Sliding Door

① Prepare Bottom Rollers.

② Hang one Sliding Door placing Glass inside Bottom Guide.

Install Bottom Rollers

③ Install Bottom Rollers.

NOTE: Begin with wheel alligned to center of out-of-round position. See Page 5 before installing Rollers.

Install Second Door

④ Repeat Steps 1 through 3 to install second Door.

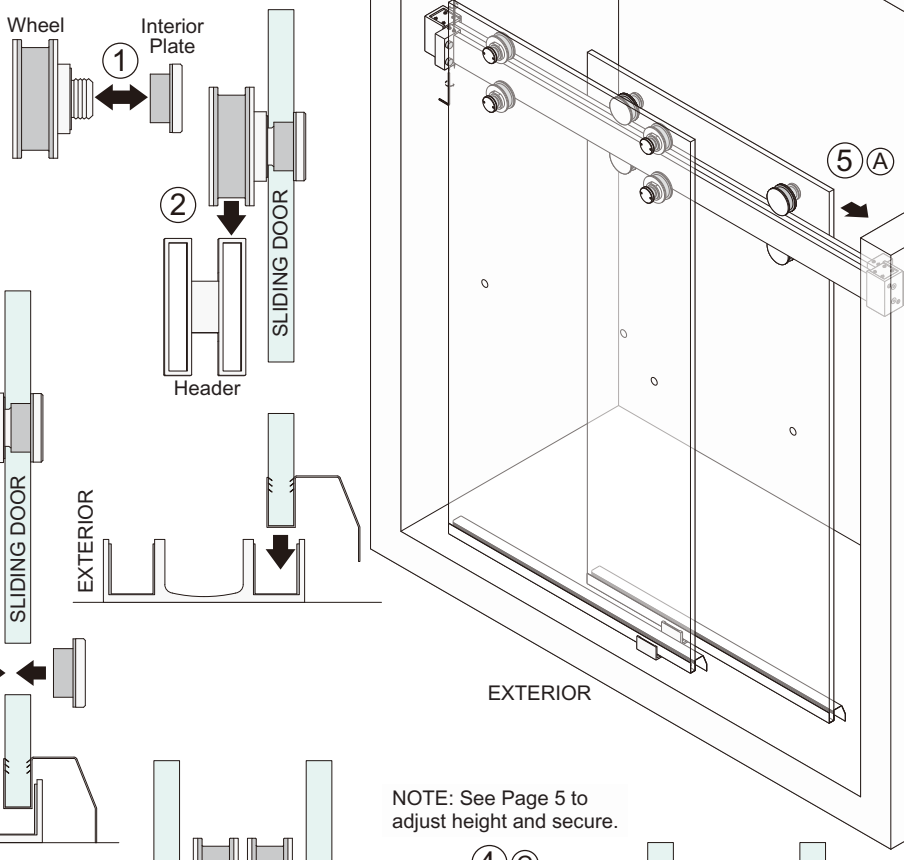

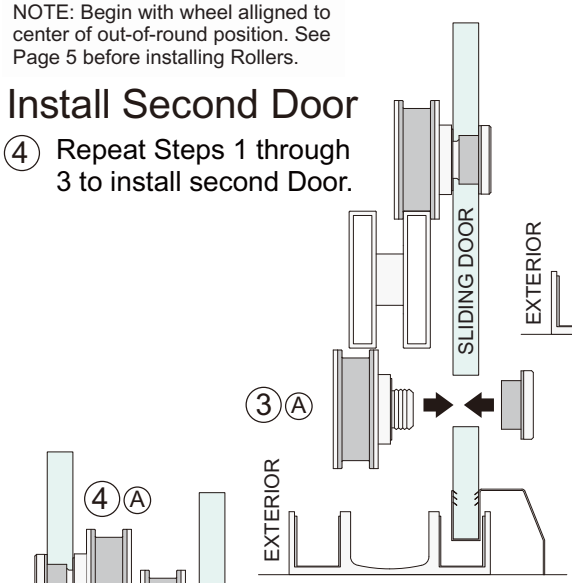

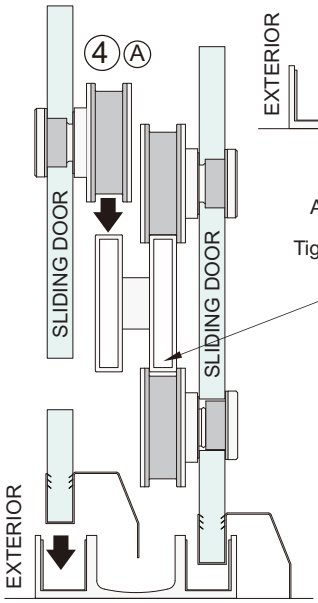

3 B
Adjust wheel position snug to Header. Tighten Rollers Securely.

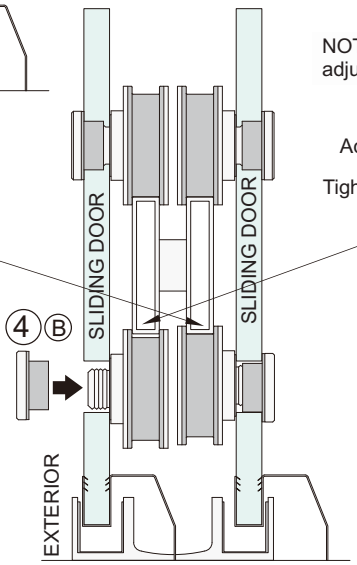

NOTE: See Page 5 to adjust height and secure.

4 C
Adjust wheel position snug to Header. Tighten Rollers Securely.

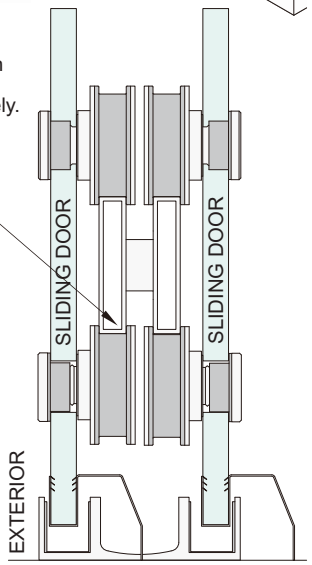

Position and Secure Door Stops

⑤ Open each Door to maximum open position. Position and tighten each Stopper.

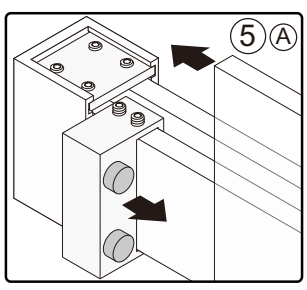

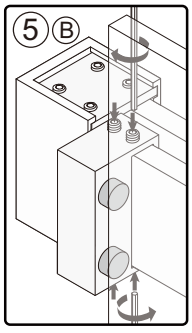

FINISHING

Unpack and Install Thru-Glass Pull

① Unpack and unscrew Mounting Posts from Towel Bar Base.

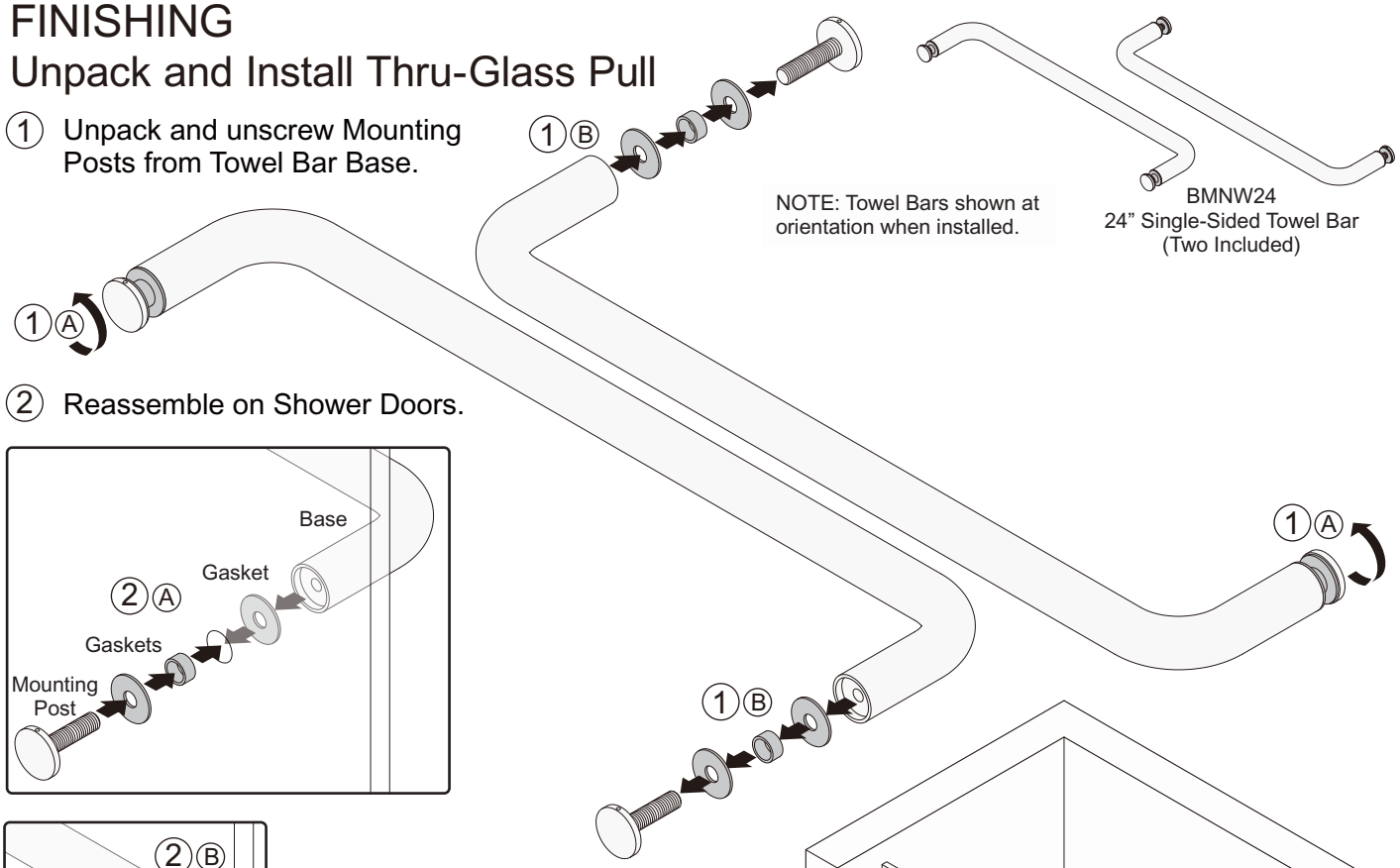

NOTE: Towel Bars shown at orientation when installed.

BMNW24
24” Single-Sided Towel Bar
(Two Included)

② Reassemble on Shower Doors.

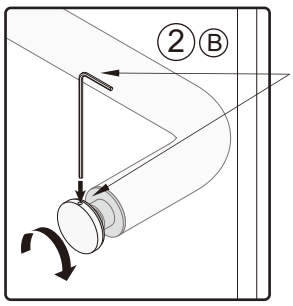

Screw Mounting Post into Base. Tighten completely using included Allen Wrench placed in hole in Post.

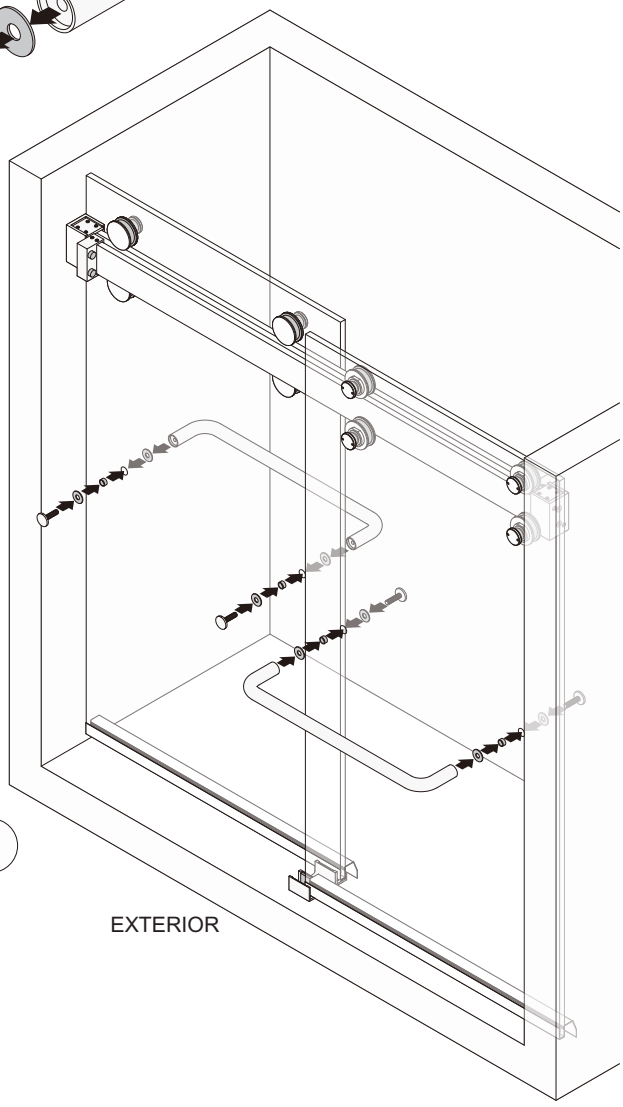

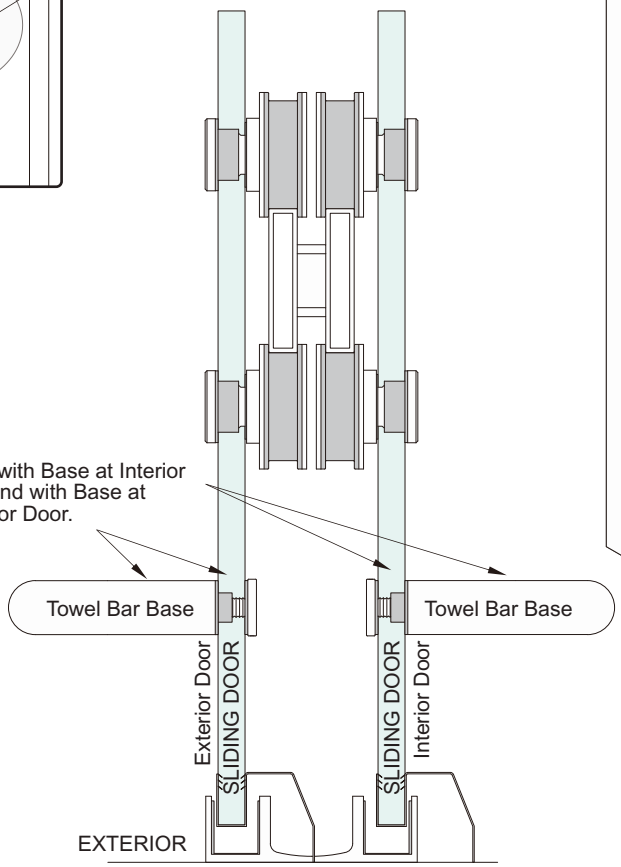

FINISHING (CONTINUED)

Install L-Seal

① Measure and Cut L-Seal.

② Install L-Seal on wall side of each Sliding Door.

NOTE: Temporarily attach L-Seal to each Door and use as guide for final position.

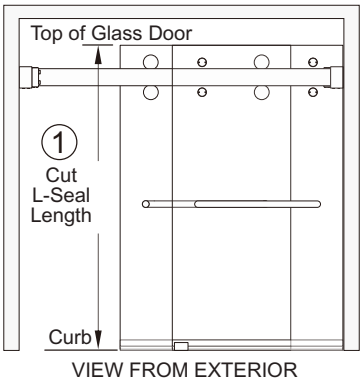

VIEW FROM EXTERIOR

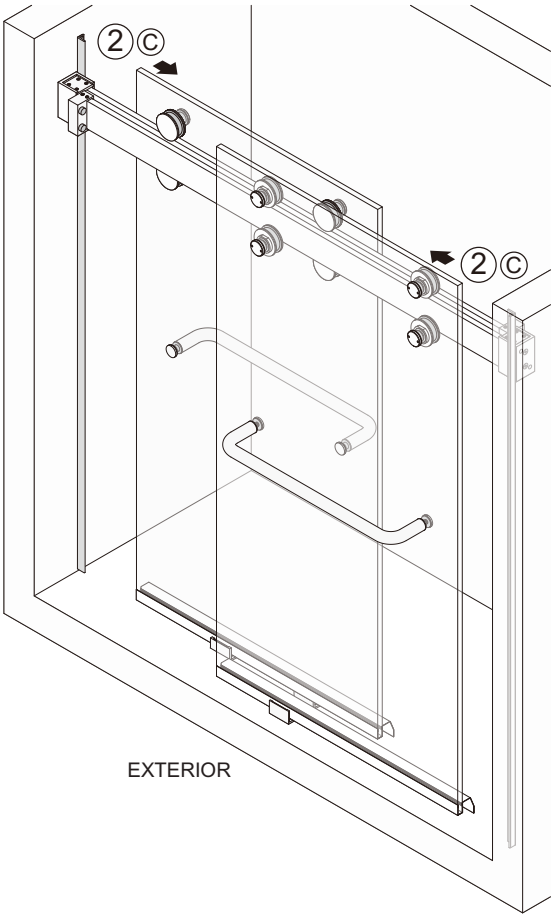

EXTERIOR

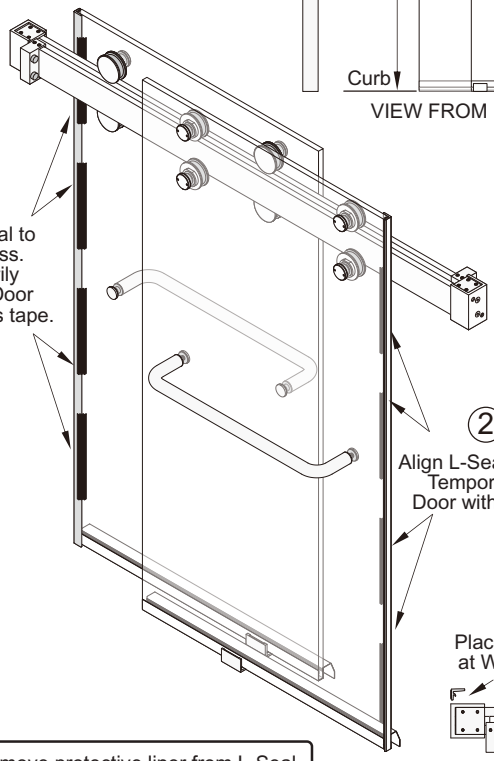

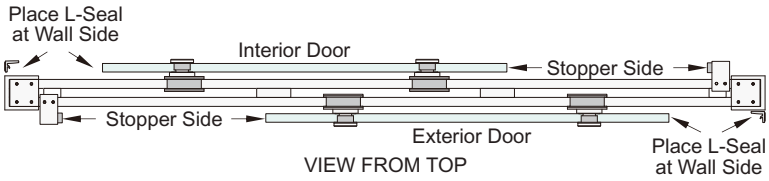

VIEW FROM TOP

