www.forgetools.net

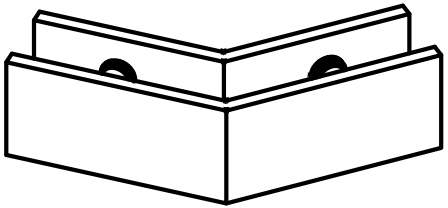

Front View

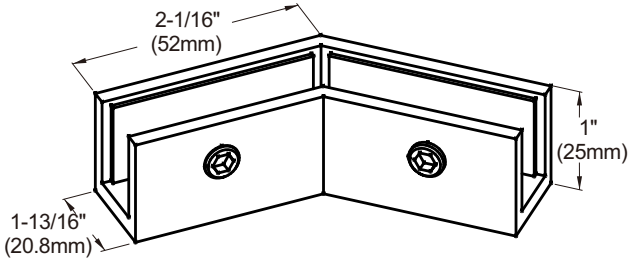

Important Information:

The sleeve over 90 degree glass clamp can be usedto hold panels together as a silicone caulk joint cures. It alsoprevents the panels from moving apart or from being poorlyaligned. Please note that these clamps cannot replacesupport bars or headers on a glass shower enclosure.

Specifications:

Glass Sizes: 3/8" (10mm) to 1/2" (12mm) thick tempered safety glass
Construction: Solid brass
Includes: Gaskets, screws and template

Use of Gaskets:

For 3/8" (10mm) Glass: Use one thick gasket on each side
For 1/2" (12mm) Glass: Use one thick gasket on each side

Sleeve Over Clamps
Code NO. **GSSO135**
135 Degree Sleeve Over Glass Clamp

Contact information: +1 (657) 799-6461
Email: info@forgetools.net **www.forgetools.net**

www.forgetools.net

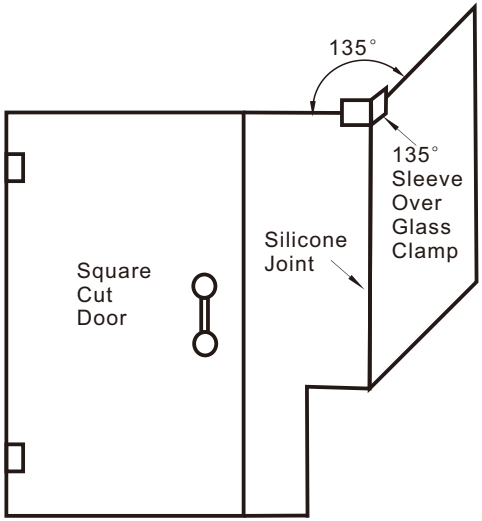

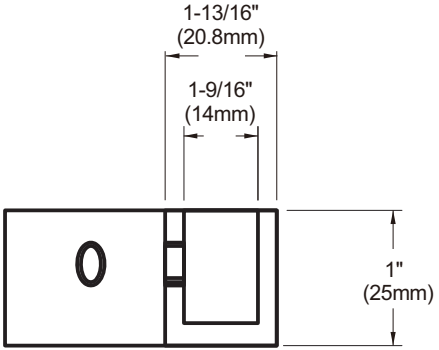

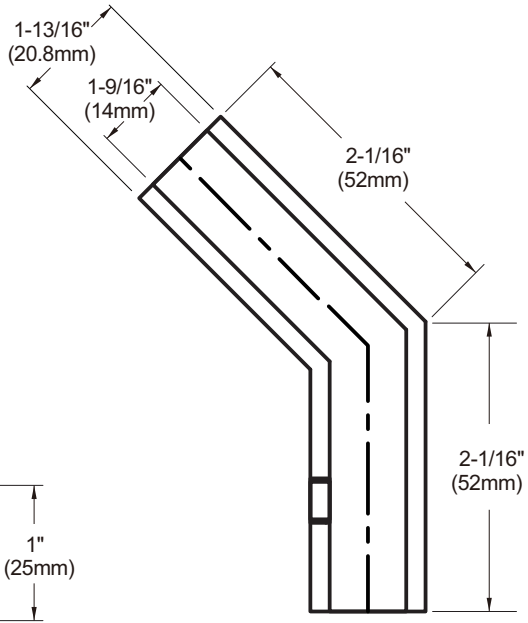

Sleeve Over Clamps

Code NO. **GSSO135**

135 Degree Sleeve Over Glass Clamp

Contact information: +1 (657) 799-6461

Email: info@forgetools.net **www.forgetools.net**