FORGE
TOOLS AND HARDWARE
www.forgetools.net

* **SEE TEMPLATE ON BACK** *
Refer to Dimensions Shown
to Ensure Accuracy

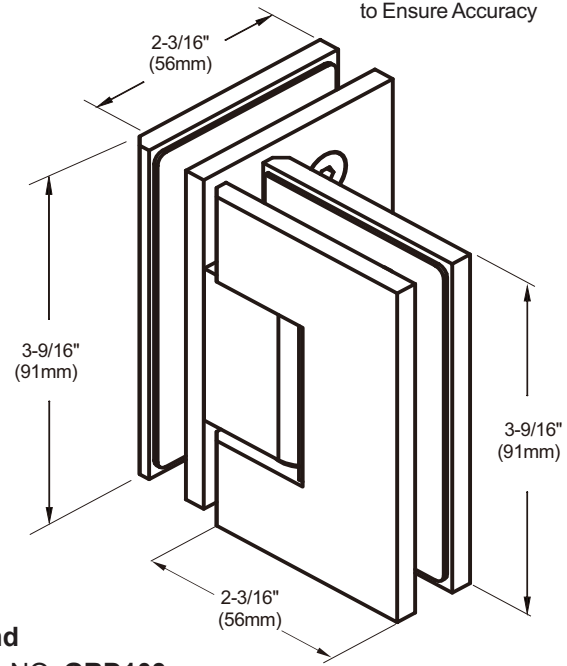

Grand
Code NO. **GRD103**
Glass to Glass 90 Degree

Important Information:

This hinge contains a dual degree pivot pin. The pivot pin is set for normal door closing position. You have the option of altering the closing position of the door 5 degrees inward by utilizing the opposite side of the pivot pin, which has been pre-machined. Special order custom pivot pins are available that can be machined at any angle up to 45 degrees.

Specifications:

Glass Sizes: 3/8" (10mm) to 1/2" (12mm) thick tempered safety glass
Construction: Solid brass
Closing Type: Self-centering when within 15° of closed position
Cutout Required
Includes: Gaskets, screws and template

Maximum Door Capacities for Two Hinges or Three Hinges:

Maximum Door Weight: 80 lbs.(36kg) 120 lbs.(54kg)
Maximum Door Width: 28"(711mm) 32"(813mm)

Use of Gaskets:

For 3/8" (10mm) Glass: Use one thick gasket on each side
For 1/2" (12mm) Glass: Use one thick gasket on each side

FORGE
TOOLS AND HARDWARE
www.forgetools.net

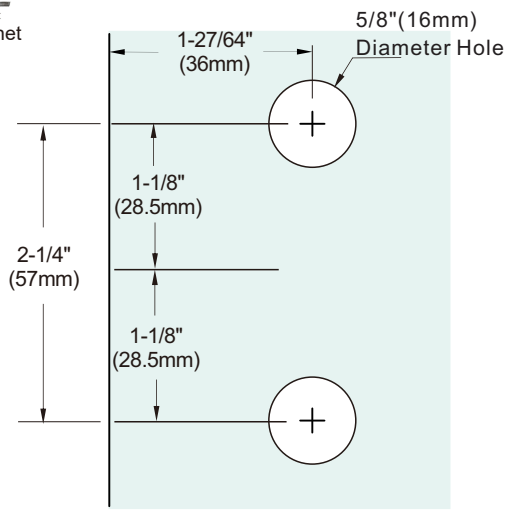

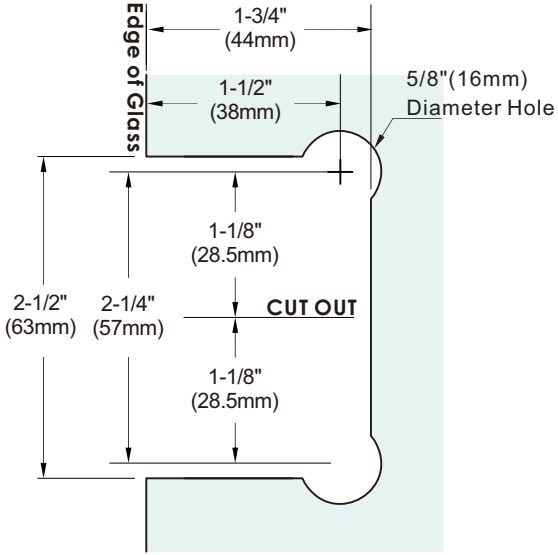

Glass Cutout

IMPORTANT: Project measurements from the edge of the glass.

Grand

Code NO. **GRD103**

Glass to Glass 90 Degree

Email: info@forgetools.net **www.forgetools.net**