www.forgetools.net

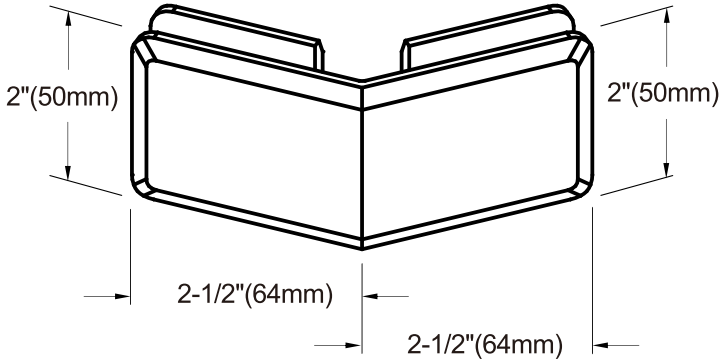

FRONT VIEW

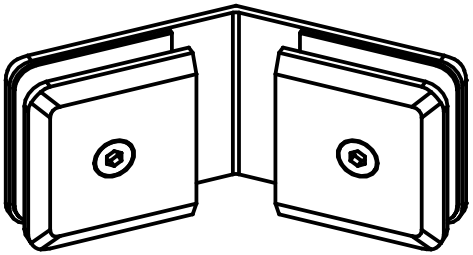

REAR VIEW

Glass Clamps

Item Code: GGCB135B

Beveled 135° Glass Clamp

SPECIFICATIONS

Material: Solid brass

Glass Thickness Range: 5/16"(8mm) to 1/2"(12mm)

Hole Size Required: 3/4"(19mm)

Includes: Mounting screws and gaskets

www.forgetools.net

TYPICAL INSTALLATION

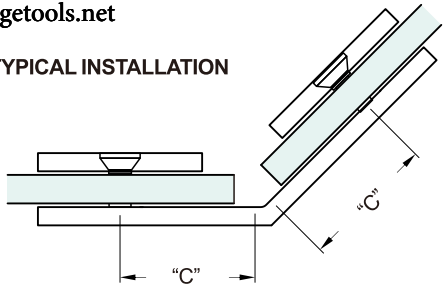

TEMPLATE FOR SQUARE CUT GLASS

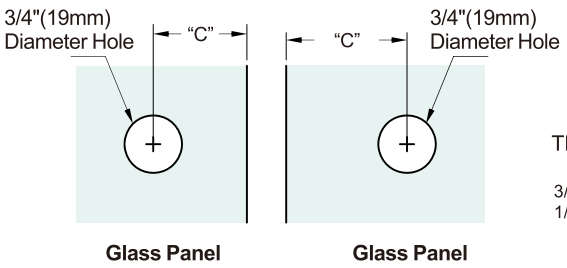

Glass Thickness	"C" Measurement
3/8"(10mm)	1-5/16"(33mm)
1/2"(12mm)	1-1/4"(32mm)

TYPICAL INSTALLATION

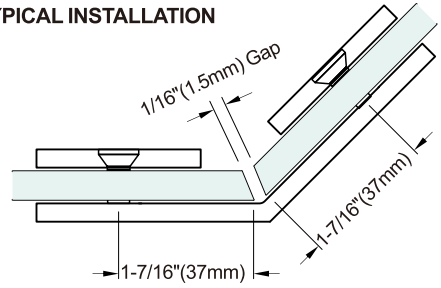

* From the Outside Edge of Miter

TEMPLATE OPTION FOR 22-1/2° MITERED GLASS

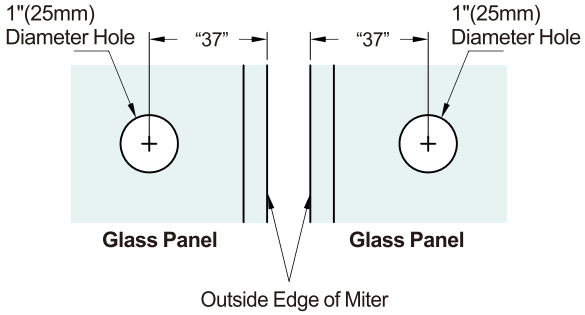

Glass Clamps

Item Code: GGCB135B

Beveled 135° Glass Clamp

Email: info@forgetools.net